1
Ag84M
no.387

Historic, archived document

Do not assume content reflects current scientific knowledge, policies, or practices.

1
Ag84M
M.P. 9387
Cop. 3

LIBRARY
RECEIVED
★ FEB 21 1941 ★
U.S. Department of Agriculture

# TURPENTINE

## STILL BUILDINGS AND EQUIPMENT

43

UNITED STATES DEPARTMENT OF AGRICULTURE • MISCELLANEOUS PUBLICATION No. 387 • WASHINGTON, D. C.

# TURPENTINE STILL BUILDINGS AND EQUIPMENT

By the NAVAL STORES RESEARCH DIVISION

Bureau of Agricultural Chemistry and Engineering

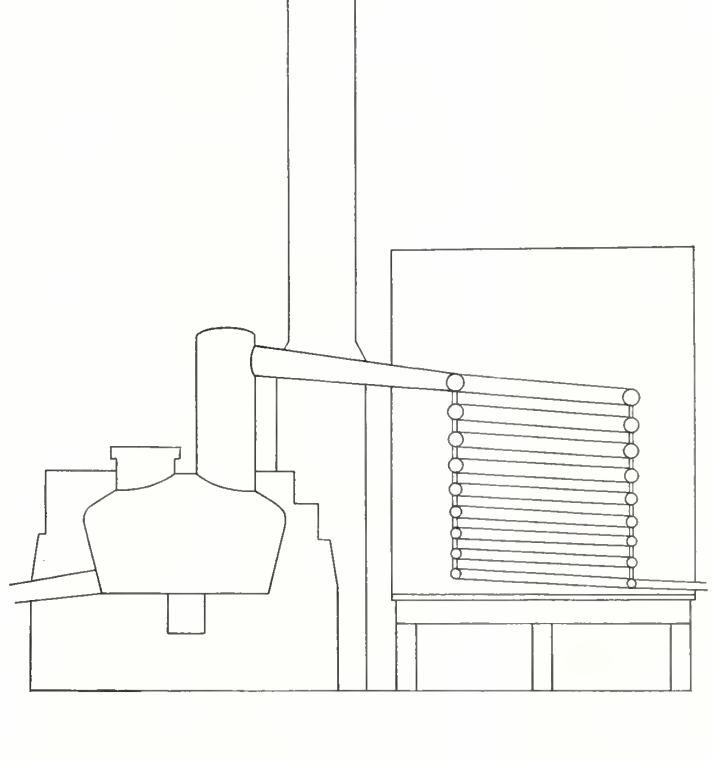

UNITED STATES GOVERNMENT PRINTING OFFICE • WASHINGTON, D. C. • 1940

# Contents


| | Page |
|---|---|
| Introduction | 1 |
| Selection of still site | 3 |
| Topography of still site | 3 |
| Water supply | 3 |
| Timber supply | 4 |
| Shipping facilities | 4 |
| Location of buildings | 4 |
| Insurance regulations | 4 |
| Design of still buildings | 7 |
| Single-still building | 7 |
| Double-still building | 11 |
| Cost of still buildings | 19 |
| Ramps for still buildings | 19 |
| Specifications for construction of copper turpentine fire still | 21 |
| Material requirements | 21 |
| Construction | 21 |
| Specifications for construction of turpentine still worm | 25 |
| Material requirements | 25 |
| Construction | 25 |
| Guarantee of workmanship | 27 |
| Directions for setting fire still | 27 |
| Testing of still | 27 |
| Materials for construction | 27 |
| Slaking lime for mortar | 27 |
| Location of still and walls | 27 |
| Concrete or brick foundation | 28 |
| Construction of walls | 28 |
| Height of bench wall | 29 |
| Filling between walls | 29 |
| Setting grate bars and hearth | 29 |
| Installing fire door | 30 |
| Position of flues | 30 |
| Finishing bench wall | 31 |
| Finishing outside wall up to level of bench wall | 31 |
| Placing still on bench wall | 31 |
| Building fire path | 32 |
| Insulating top of still | 33 |
| Brickwork above fire path | 33 |
| Chimney | 34 |
| Covering wing walls for fire protection | 34 |
| Floor joists and flooring above still | 34 |
| Installing recording thermometer | 34 |
| Condenser tub and worm | 35 |
| Turpentine separators and dehydrators | 35 |
| Strainers | 37 |
| Vats | 40 |
| Storage of turpentine | 40 |
| Storage of rosin | 41 |
| Rosin trough | 41 |
| Temperature regulator for tub water | 41 |
| Cooper's winch | 41 |



For assistance in the preparation of this publication acknowledgment is made to the following: F. P. Veitch, formerly Chief, Naval Stores Research Division; J. O. Reed, development engineer, Chemical Engineering Research Division; George P. Shingler, senior chemist in charge, and E. L. Patton, associate chemical engineer, Naval Stores Station, Olustee, Fla.; K. S. Trowbridge, formerly naval stores cooperative agent for Georgia; C. H. Coulter, formerly naval stores cooperative agent for Florida, and C. F. Speh, principal chemist in charge, Naval Stores Research Division.

The plans, specifications, and bills of materials for the buildings and for the turpentine still and accessories and directions for setting were prepared by J. O. Reed. The drawings were made by I. Bauserman and R. M. Baker, draftsmen, Chemical Engineering Research Division.

350317

# Introduction

For a number of years the Naval Stores Research Division of the Bureau of Chemistry and Engineering has included in its program an investigation of the needs of the naval stores industry with the object of improving old and developing new equipment, improving products, and lowering costs of production. As a result of these studies at Washington and at the Naval Stores Station, Olustee, Fla., many recommendations for improved practices and equipment have been made to the industry, and the improvements are rapidly being adopted by the producer. Throughout this investigation and in the resulting recommendations, practicability has been stressed. It is not suggested that a still building that is serviceable and adapted to economical operation be dismantled and replaced by one of the type recommended by the Department of Agriculture. Instead, it is suggested that, when the need of a change or replacement arises, consideration be given to the designs offered. The producer himself is in the best position to decide whether or not he is justified in making any change.

The operation of a still for less than six crops of cups is not recommended.

The importance of the location of the still and its arrangement and equipment are recognized by most producers. The advantages gained by the adoption of the best woods practices can easily be nullified by a poor location, inadequate equipment, and poor stilling. The yields and grades of turpentine and rosin are determined at the still. An improperly located, designed, or constructed still building can cause loss through low yields, low grades, high cost of maintenance, higher hauling costs, high labor cost, and high fire risk.

The location must be carefully selected. The first consideration is the existing and the potential timber supply; the water supply and storage and shipping facilities also are very important factors. The size and general design or lay-out of the still must be considered.

The suggestions and designs offered here are by no means believed to be the only ones possible, but they are based on the results of considerable study both in the field and at the Naval Stores Station, and have been tested for practicability and efficiency. The details of these plans can be modified to suit almost any location or method of operation.

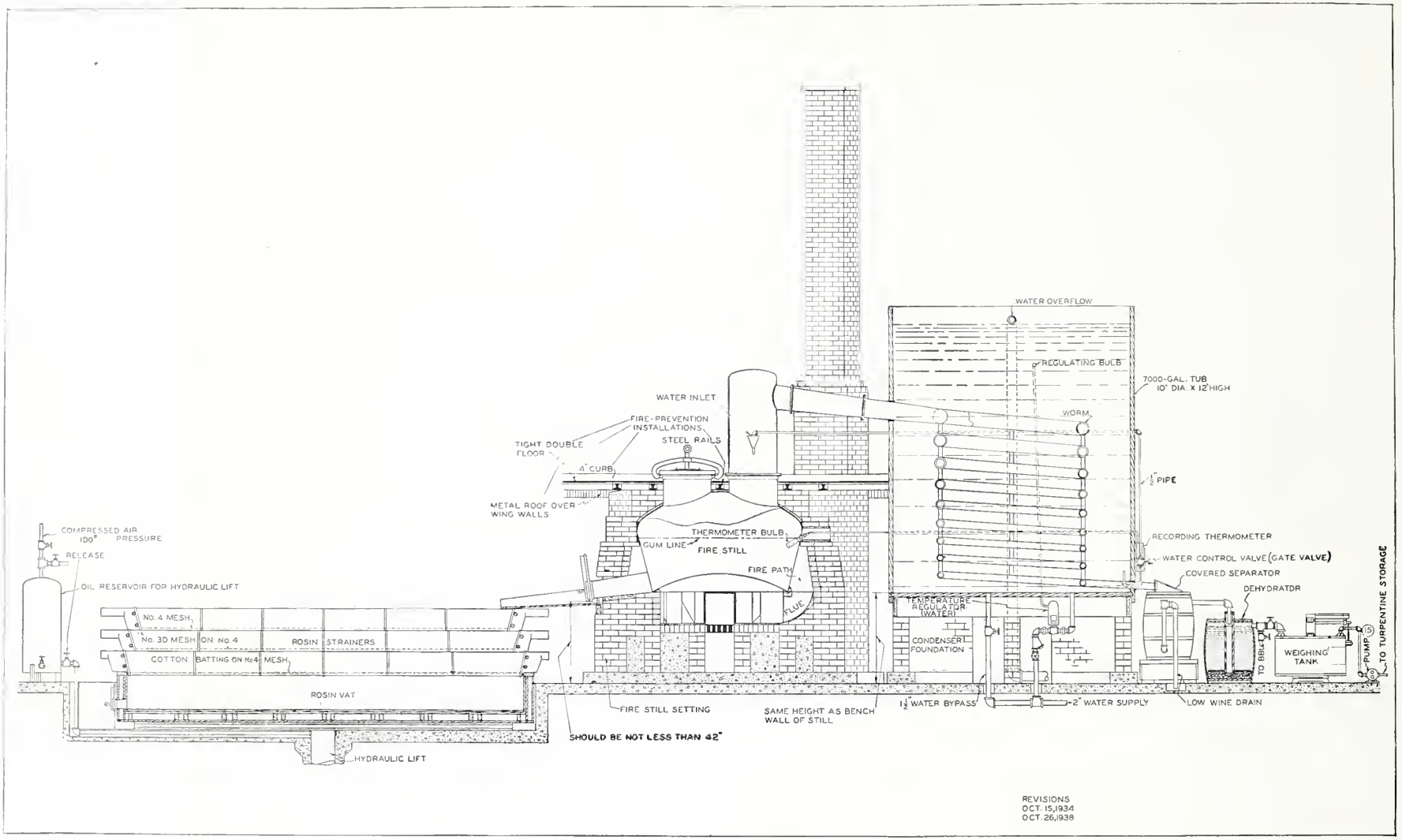


Figure 1.—*Layout of turpentine fire still.*

Figure 1 shows the lay-out of the fire still at the Naval Stores Station. Some of the equipment in this lay-out was necessary to obtain accurate experimental results in the work. The most important parts of the lay-out will be discussed under separate headings, but some of the minor features also are worth-while refinements—for example, the use of a gate valve, which controls the flow of water to the still better than does the usual globe valve. Again, the Naval Stores Station has found it desirable to weigh the turpentine instead of gaging the yields. For this purpose, a weighing tank (fig. 1) was devised. This tank, resting on a platform scale, receives turpentine directly from the outlet of the dehydrator and discharges it into a pipe line to the storage tank. The thermostatically controlled valve leading into the condenser tub has been helpful in the study of condenser efficiency.

## Selection of Still Site

Probably the most important and the most difficult step in the erection of a fire still is the selection of a site. Among the many points to be considered are: (1) The lay of the land, which will determine the type of ramp, the drainage system, and rosin handling; (2) the lay-out of the plant that will provide the most efficient location of each building and storage space for raw materials; (3) the type and size of storage to be used for turpentine and rosin; and (4) fire risks.

From 7 to 10 acres of land are necessary for the still plant. Most of the stills now in use are cramped for space. In order to secure the minimum rate, insurance underwriters' regulations require that all buildings be separated by at least a 100-foot space and that rosin be stored 100 feet away from any building. From 7 to 10 acres will be sufficient for the following buildings: Office and commissary, still building, rosin-cooling shed, cooper shop, stiller's quarters, turpentine storage shed or tank, garage, stable, and a 2,000-barrel rosin yard.

The most important requirements for still sites are discussed in the following paragraphs. However, there may be important factors, such as equipment on hand and transportation, which make it advisable to select a site that does not meet all these requirements.

### Topography of Still Site

If possible, sloping ground should be selected for the still building in order to take advantage of gravity in the handling of the crude gum and the finished products. The still building should be located so that the gum can be unloaded directly from the truck to the still platform. If the ground has a slope of from 8 to 12 feet per 100 feet, a gravity-flow still is recommended. With such a still site rosin runs directly into the barrel from a tail gate in the end of the rosin vat. The finished products, rosin and turpentine, should move downhill to their respective storage areas.

If no hill site is available and level ground must be used, select the driest place possible for the still building. This selection should be made after a heavy rainfall, to see where the water lies and drains. A drainage system must be provided to take care of rainfall, condenser water, and the low wine from the still.

The rosin yard should be a well-drained area at least 100 feet from the nearest building. A space 165 feet square will hold approximately 2,000 barrels of rosin, set in double rows with sufficient space between the rows to "throw down" and roll out the barrels.

### Water Supply

Whether a fire still or a steam still is to be used, an ample supply of cold water, preferably below 70° F., is required for efficient condensation of the spirits. The water must be clear and colorless to avoid contamination of the rosin with foreign matter. The less dissolved mineral matter there is in the water the better. Iron compounds in the water and rust, particularly, are injurious, as even extremely small quantities of iron

darken the color and lower the grade of rosin, often several grades. Furthermore, an appreciable quantity of iron in the rosin renders it less desirable for certain large industrial uses. If a steam boiler or steam still is to be used, particular attention should be given to determining whether the water will form boiler scale. Water from shallow wells generally is soft and more suitable for boiler use than water from deep or artesian wells. Finally, the need for suitable drinking water must not be overlooked. Wells should be so located and protected that the drinking water cannot be contaminated by surface drainage.

### Timber Supply

Another factor to be considered is the location of the still with respect to the timber to be worked. If the timber supply is scattered and not easily accessible, a study should be made to determine whether locating the still near the timber will be more or less economical than locating it at a point convenient for transportation of the turpentine and rosin. Also, if several stills at different locations are being run by the same operator, the possible economy of establishing a central still to handle all the gum should be considered. One of the usual reasons given for maintaining several stills in a relatively small territory is that they are necessary in order that the operator may hold the territory. In most cases "side camps" to "bunch" the gum at strategic points for delivery to a central still are more economical to operate and as effective as the numerous small stills in holding the territory. In general, the location of the still on a railroad or arterial highway is becoming more important.

### Shipping Facilities

If it is planned to ship spirits of turpentine in tank cars, provision should be made for a railroad siding, as loading tank cars from barrels is costly and wasteful and requires considerable labor. Also, if rosin is destined for shipment by rail, location on a railroad is economically important.



## Location of Buildings

After the site has been selected, the next step is to decide on the location of the buildings on the site. Of first importance is the still building, which, as stated previously, should be placed on sloping ground, if possible, but at any rate on dry, well-drained ground.

The still building should be large enough to provide the deck-floor area needed for the handling and storage of gum as received, and to permit the sorting of the dip by classes. Sorting enables the stiller to obtain without difficulty still charges that will produce a grade of rosin yielding the highest monetary return.

The rosin vat should be large enough and so placed as to prevent rain water from getting into the vat or barrels after the rosin has been dipped or drawn.

The stable for livestock and the garage should be at least 100 feet from all other buildings and on the normal leeward side of prevailing winds. Protection from weather for both live and rolling stock is a prime requisite.

Proper protection for food and supplies should be provided. The commissary and office are usually in the same building, but should be in separate rooms.

### Insurance Regulations

Before beginning construction, the operator should familiarize himself with the latest insurance requirements in order to obtain the lowest possible insurance rates, and then plan his still in conformity with these requirements. As insurance schedules are subject to change, the operator should write to the Southeastern Underwriters' Association, Atlanta, Ga., for the latest information.

The schedule of insurance rates applying to still buildings at the time this publication was prepared was as follows:

The base rate on any turpentine still is $2.50 per $100 of insurance. This is for a frame building with approved roof.

To this base rate of $2.50 per $100, the following penalties must be added for each $100 of insurance:

1. If the roof is other than metal, slate, or approved composition, add 50 cents per $100.

2. If the firebox is not properly protected by brick flare-wing walls (fig. 2) extending 8 feet from firebox, with permanently attached sheet of corrugated-iron roofing from wing wall to wing wall over door to firebox, and if roof is not at least 8 feet above firebox (according to Government specifications, fig. 18), add $1.75 per $100.

3. If top of still is not covered with 1/8-inch asbestos paper, wetted and drawn over side, and securely held in place with an additional 1-inch layer of asbestos-cement mortar put on over the asbestos paper (fig. 3), add 75 cents per $100.

4. If floor of deck directly over still setting (fig. 18) is not in accordance with the following approved standards, add 75 cents per $100. Floor or deck directly above still setting shall rest on iron joists. Charging floor shall be made of tight-

Figure 2.—*Fire door and wing walls of still.*

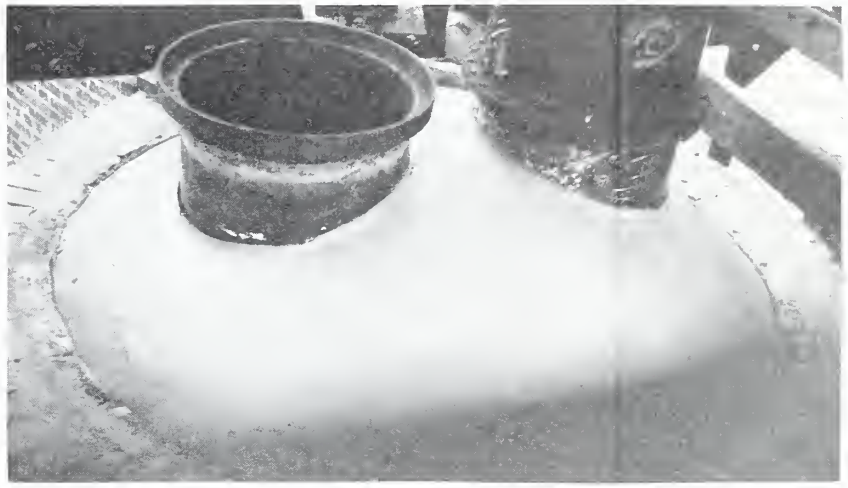

Figure 3.—*Top of still covered with asbestos.*

fitting double boards with waterproof paper between, but in lieu of the double boards, single tongue-and-groove boards covered with not less than No. 16-gage sheet metal may be used. Space between floor and still collars shall be tightly filled with asbestos packing. A curbing, not less than 4 inches high and 2 inches thick, shall be securely fastened to the charging floor, between the still collar and that part of the charging floor over or nearest the wing walls, and so arranged that no molten gum or rosin can flow on that portion of the floor immediately over and between wing walls or around the curbing and down in front of the firebox.

5. If rosin or turpentine is stored within 100 feet of any building, add $1 per $100.

6. If dross or chips are stored within 50 feet of a building, add $1 per $100.

7. If spirits is barreled in the building, and if a covered separator barrel is not used, add 25 cents per $100.

8. If chip skimmings are not immediately sprinkled with water, add 15 cents per $100.

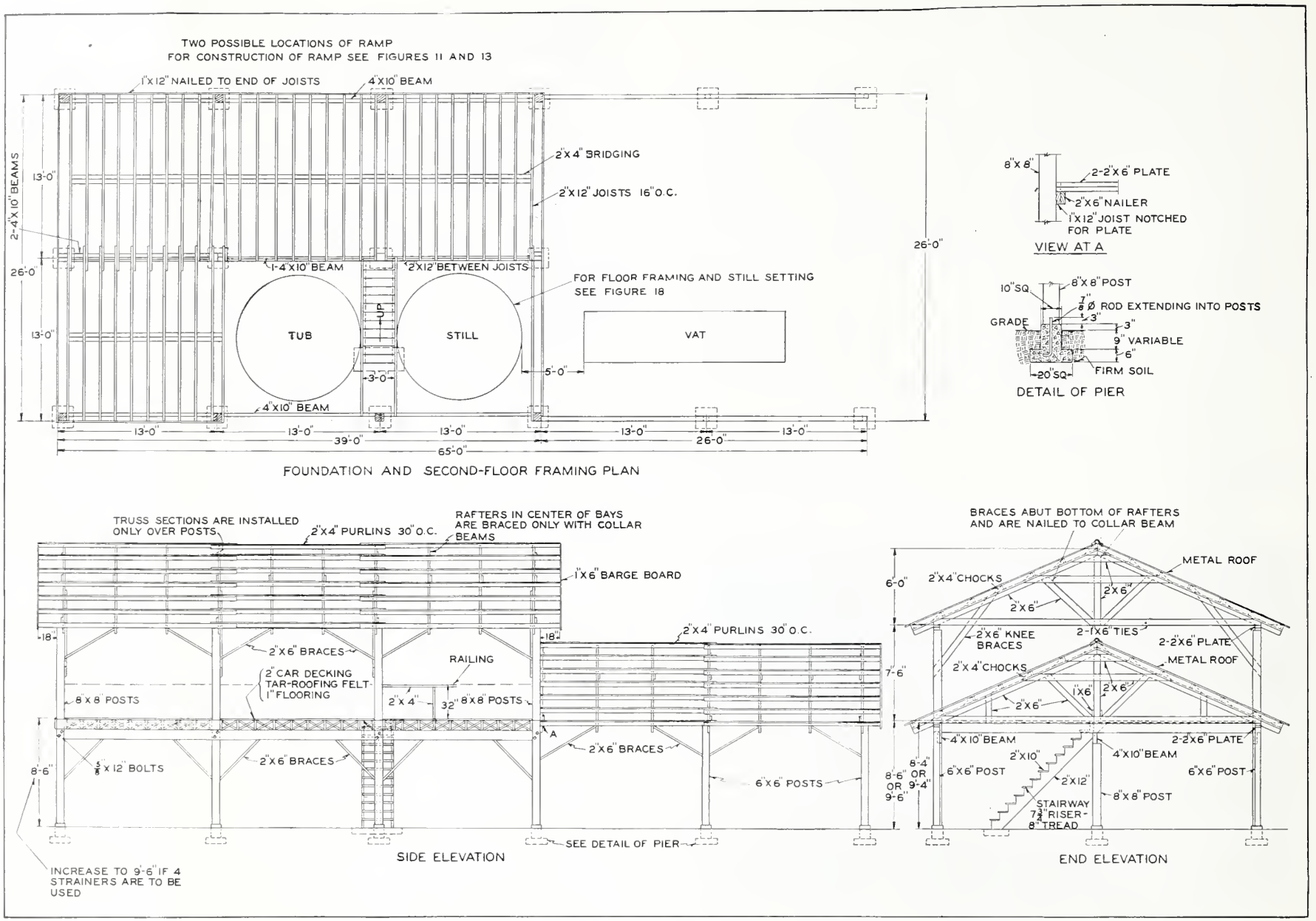


Figure 4.—*Plan A for turpentine still building.*

9. If all still skimmings are not removed promptly after charge is drawn, and/or more than 1 barrel of batting and/or 1 barrel of strainer dross for each still in operation are allowed to remain within 50 feet, but not nearer than 25 feet of still building, add 15 cents per $100.

10. If all fire is not drawn from firebox and wetted down before the charge is removed from the still, add 50 cents per $100.

11. If tubs of dry sand with scoops and pails of water are not provided (two tubs required on charging platform and two near tail gate), add 25 cents per $100.

12. If there is not a standard thermometer properly installed and regularly used and kept in good condition, add $1.50 per $100. (See fig. 1.)

13. If signs prohibiting smoking are not posted and the rules enforced, add 50 cents per $100.

If there are buildings within 100 feet, give distance, construction, occupancy, and approximate size.

The addition of all these penalties to the base rate makes the rate $11.55 per $100, instead of $2.50 per $100. As an illustration, on a $3,000 policy, the annual payment may range from $75 to $346.50, depending on how fully the above requirements have been met. Meeting all the requirements would mean a saving of $271.50 per year.

## Design of Still Buildings

Normally the still building should be built so that the crude gum can be unloaded on one side and the finished products taken away from the opposite side. (See figs. 4, 5, 6, and 7.)

### Single-Still Buildings

A single still will care for at least 30 crops, or a 1,500-unit production. For more than 1,500 units, or 30 crops, a double still is required, unless the single still is run for approximately 20 hours each day, thereby doing the work usually required of 2 stills. On a single still designed in accordance with the Government specifications and plans (fig. 18), as many as 14 charges of preheated gum have been run each 24 hours over a period of 8 months, instead of the usual 3 or 4 charges a day.

Four approved designs of buildings for single-still installations, plans A, B, C, and D, respectively, are shown in figures 4, 5, 6, and 7. These plans offer a choice that will meet the requirements of practically any location or operation where only one still is needed.

The still buildings and all equipment recommended in this publication have been designed for a still of 25-barrel capacity (787 gage gallons). In the plans shown in figures 4 and 5 the rosin shed is attached to the still building, and the buildings are similar in design except for the location of the rosin shed. The rosin shed is attached at the end in figure 4 and at the side in figure 5. Each has at least two possible ramp locations, one of which should be suitable for any turpentine-still site. The plan shown in figure 4 is for a straight-line arrangement of still, tub, and vat. That in figure 5 is for a right-angle or 90° arrangement of still, tub, and vat.

In the plan shown in figure 6 the rosin vat is under the deck floor. The cost of construction is lowered by the elimination of the attached rosin shed shown in figures 4 and 5. Although the double floor is recommended for all types of buildings, it is even more essential in this plan that the still floor be double, with waterproof paper between the two layers of flooring to prevent contamination of the rosin in the vat from gum and water leakage from the upper deck. This type of plant is not satisfactory for handling gum from more than 10 or 12 crops of timber, since it provides a comparatively small rosin-handling space, and there is insufficient space under the deck floor for either a cooper shop or storage room. The storage room and cooper shop can be attached to this building at small cost, however, and will be more convenient than when detached from the still building.

226803°—40——2

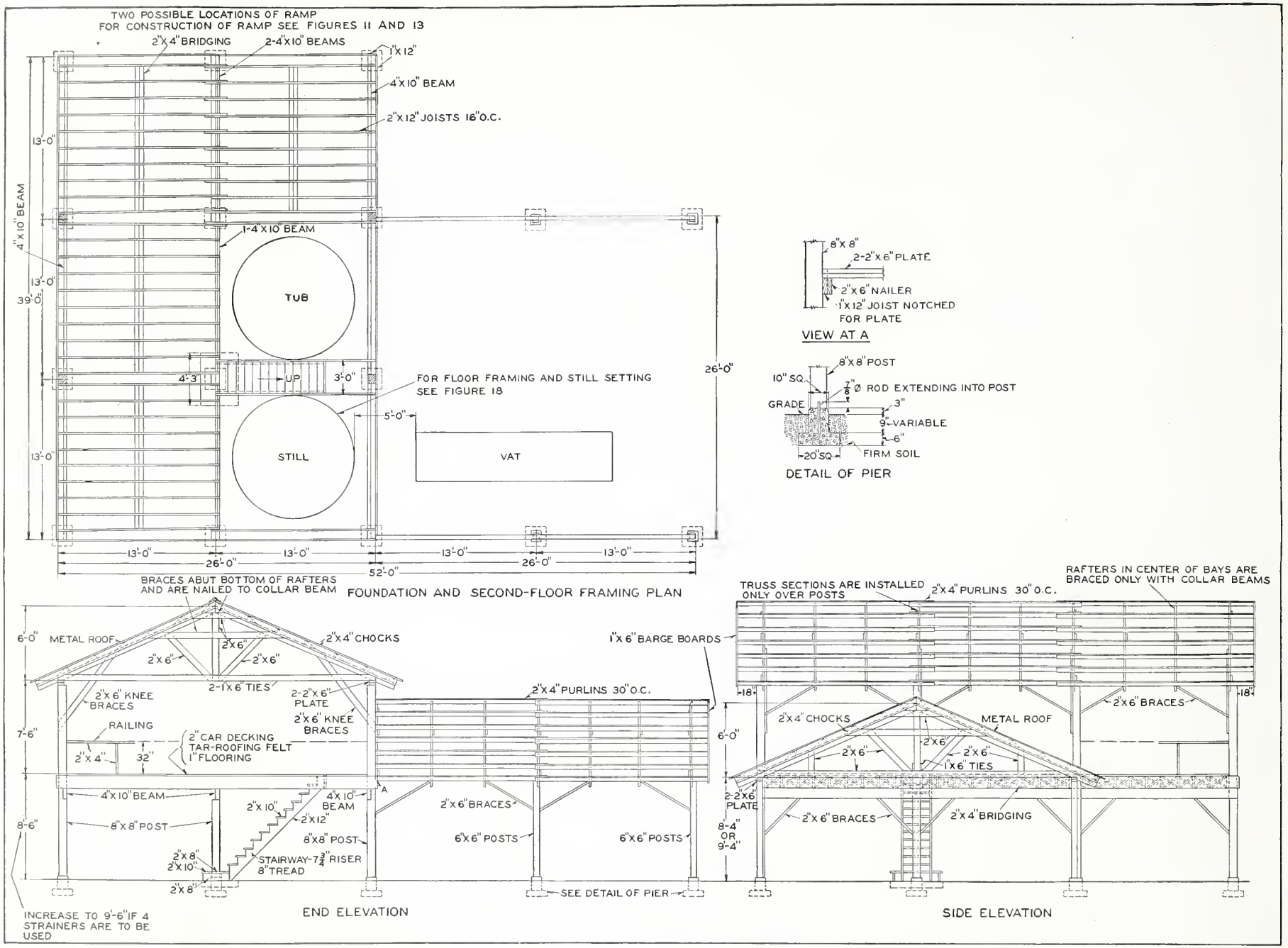


Figure 5.—*Plan B for turpentine still building.*

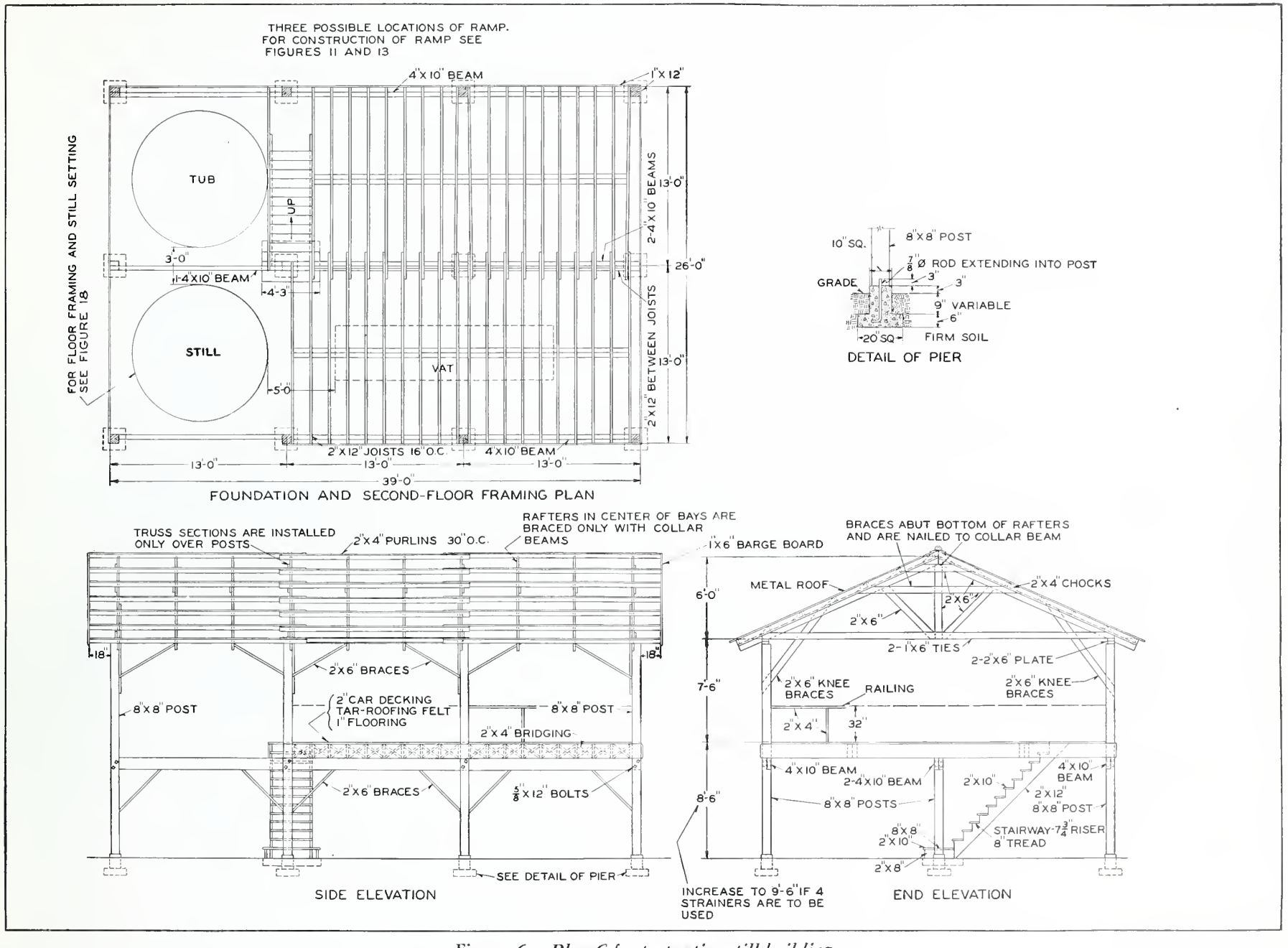


Figure 6.—*Plan C for turpentine still building.*

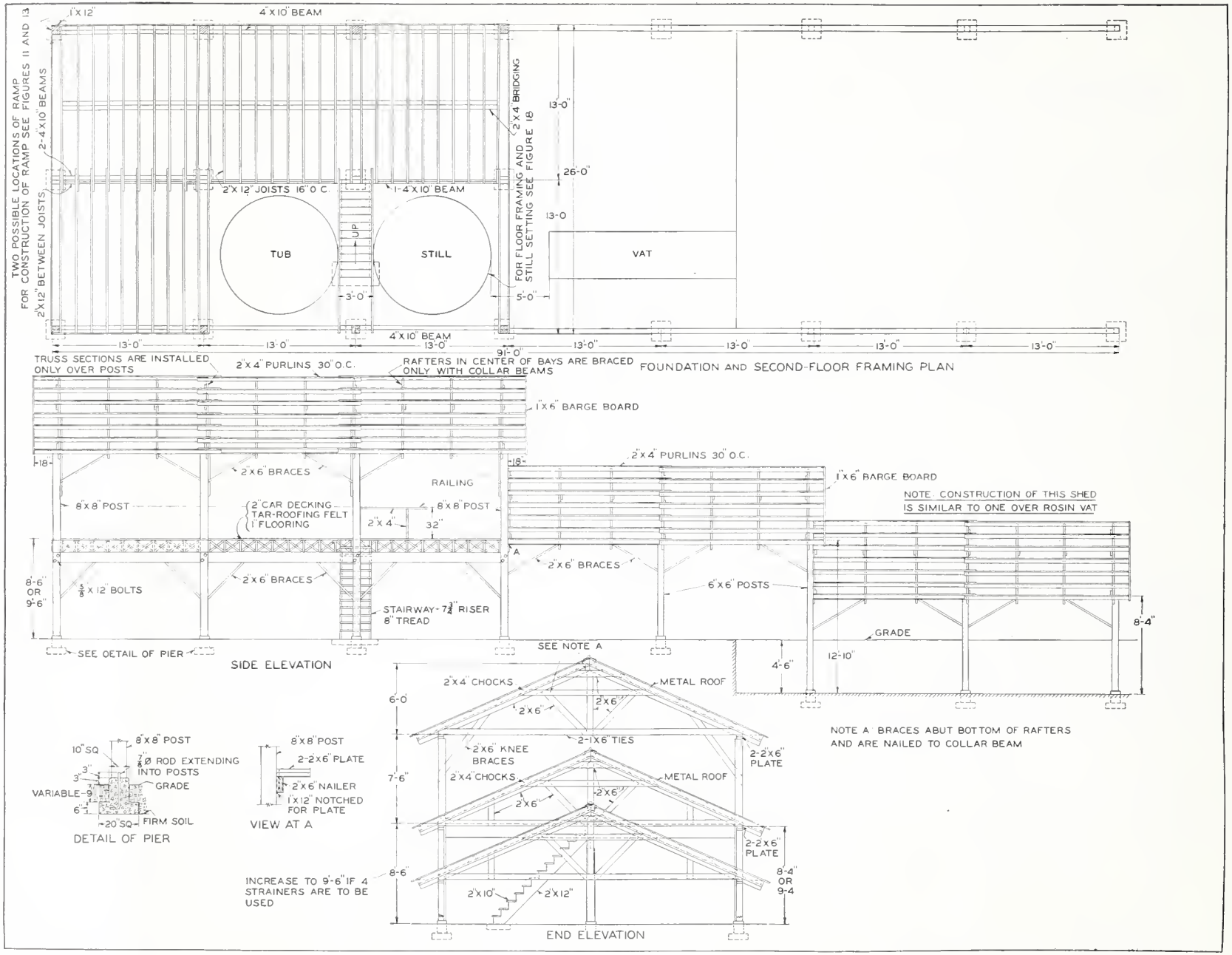


Figure 7.—*Plan D for turpentine still building.*

The plan shown in figure 7 is for a gravity-flow lay-out, and requires a hillside location having a slope of at least 8 feet in 100 feet. In this plan the rosin flows by gravity directly from the rosin vat into barrels. A tail gate in the end of the rosin vat controls the flow into a trough leading to the barrels. This plan is recommended where a suitable location is available, as it releases labor for other work. It costs more than the plans shown in figures 4 and 5, however, as it requires an additional 26- by 26-foot shed, a tail gate in the rosin vat, and possibly some excavation.

Each of these four plans has the same still building. The first two require additional material for the attached rosin shed. The gravity type requires a rosin-handling shed in addition to the shed over the vat. Bills of material for each plan are given in table 1.

The drawings, bills of material, and simplicity of design of the several types of stills should enable an average carpenter to construct these buildings satisfactorily.

## Double-Still Buildings

As previously stated, if more than 1,500 units of turpentine and rosin are to be produced annually, a single still running 3 or 4 charges a day may be inadequate. In such an event, the operator must decide whether he will run more charges a day on the one still or construct a still shed with two stills, or two separate still buildings.

Some operators may consider the danger of complete loss by fire too great to place two stills under one shed, but plans and bills of materials for the two-still lay-out have been developed for those who would take that risk in order to benefit from the economies involved.

Three designs for approved double-still buildings, plans E, F, and G, respectively, are shown in figures 8, 9, and 10. These plans offer a choice that will meet the requirements of practically any location or size of operation where two stills are needed.

The double-still building in figure 8 has a rosin shed 26 feet wide, extending along the entire side of the building. This type is very popular, and while it costs more than the other types of double-still buildings, it has many advantages. The large, open rosin shed consolidates the rosin-handling operations at one point in the building. There are no posts to interfere with the handling of the strainers, and a large, open space is provided between the rosin vats for cooling the rosin in the barrels. Space is available under the deck floor for cooper shop and storage room.

The double-still building shown in figure 9 is similar in design to that in figure 8 except that it does not have the attached rosin shed. The deck floor must be double, as specified, with a layer of tar-roofing felt between the two layers to prevent water and gum from leaking through the flooring into the rosin vats below and contaminating the hot rosin.

The double-still building in figure 10 is the cheapest to build of the three types of double-still buildings shown. The building is similar in design to the single-still building, being only 26 feet or two bays wide, as compared with 39 feet or three bays wide for the double-still buildings shown in figures 8 and 9. It has a smaller deck floor than the other double-still buildings, which is a disadvantage for gum storage. The plan shows, however, how a single-still building, such as that in figures 4 and 5, can be readily changed to a double-still lay-out by extending the length of the building two bays or 26 feet and adding a rosin shed for the new still.

Bills of material for the construction of double-still buildings in accordance with plans E, F, and G, shown in figures 8, 9, and 10, are given in table 1.

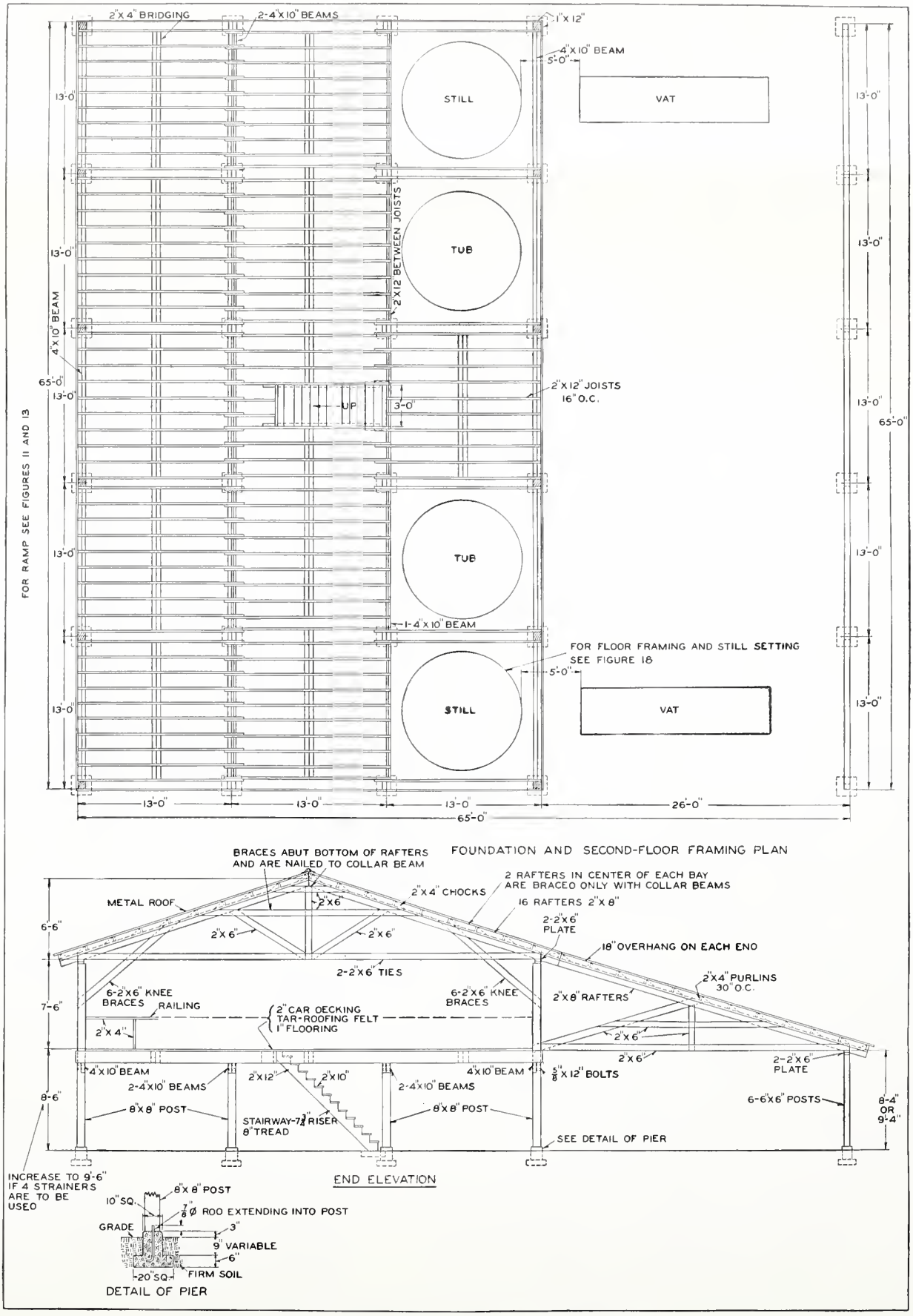


Figure 8.—*Plan E for turpentine still building.*

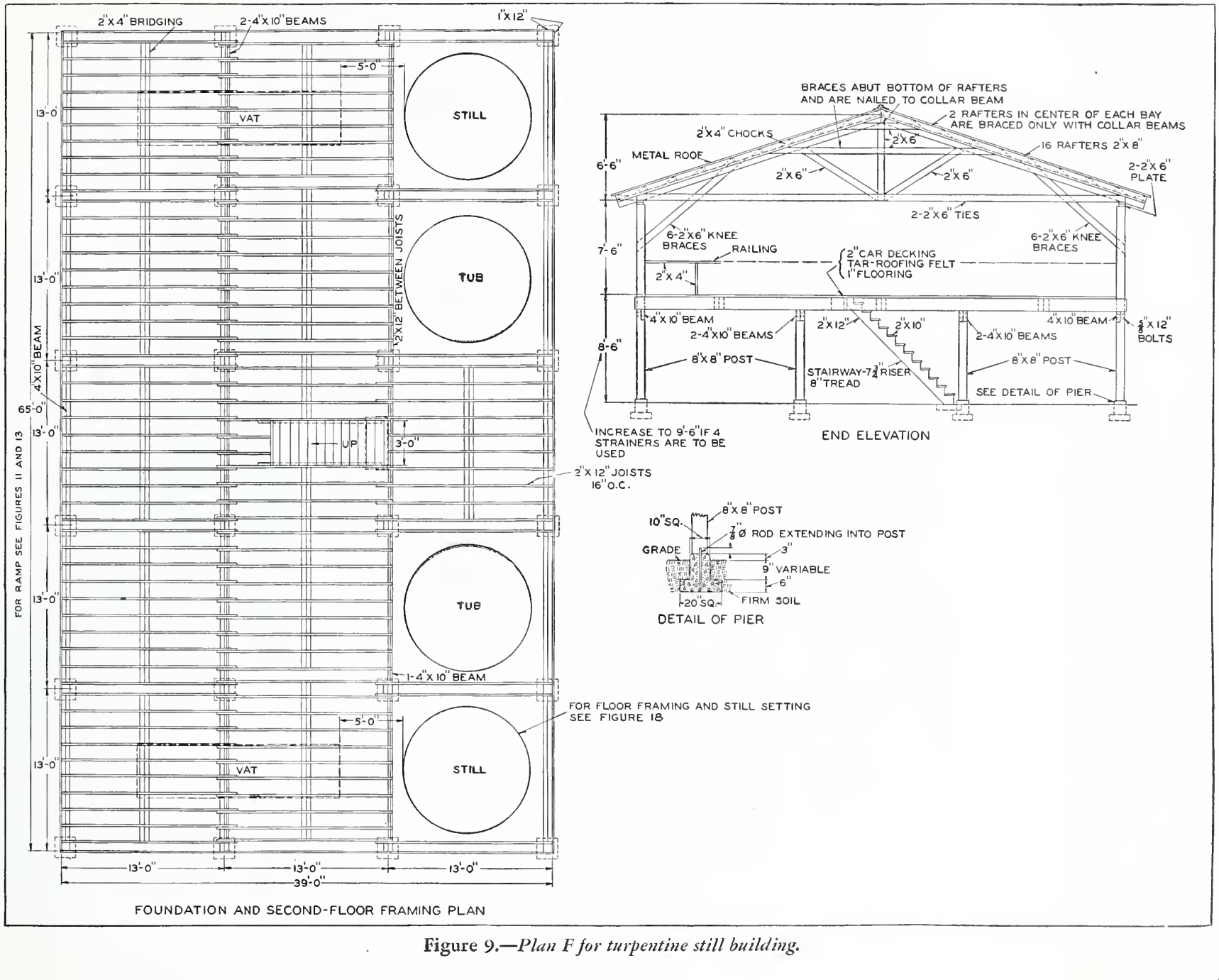


**Figure 9.**—*Plan F for turpentine still building.*

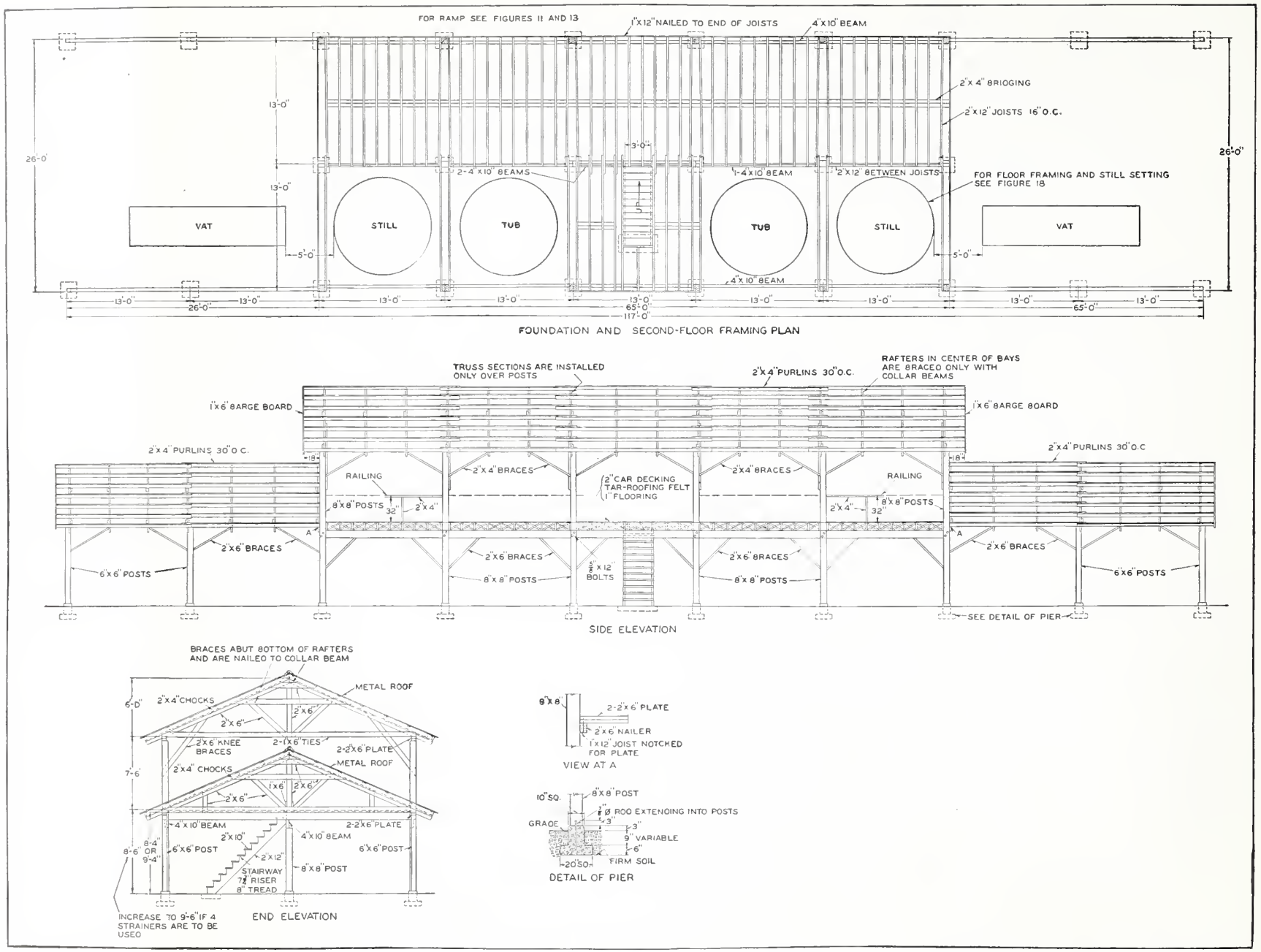


Figure 10.—*Plan G for turpentine still building.*

## Table 1.—*Bill of materials for various types of single-still and double-still buildings*

SINGLE-STILL BUILDING, PLANS A AND B (FIGS. 4 AND 5)

| Item | Pieces | Dimensions | Board measure | Remarks |
|---|---|---|---|---|
| | *Number* | | *Feet* | |
| Posts | 8 | 8 by 8 inches by 16 feet | 683 | Outside posts. |
| | 4 | 8 by 8 inches by 8 feet | 171 | Inside posts. |
| | 4 | 6 by 6 inches by 8 feet | 96 | Rosin-shed posts. |
| Beams | 3 | 4 by 10 inches by 26 feet | 260 | |
| | 4 | 4 by 10 inches by 14 feet | 187 | |
| Plates | 8 | 2 by 6 inches by 26 feet | 208 | Two 2- by 6-inch, nailed together. |
| | 4 | 2 by 6 inches by 14 feet | 56 | Do. |
| Rafters | 34 | 2 by 6 inches by 16 feet | 544 | For 18-inch overhang. |
| Purlins | 42 | 2 by 4 inches by 16 feet | 448 | |
| | 28 | 2 by 4 inches by 14 feet | 262 | |
| Barge boards | 6 | 1 by 6 inches by 16 feet | 48 | |
| Joists | 50 | 2 by 12 inches by 14 feet | 1,400 | |
| Flooring | ..... | 1 by 6, 8, 10, or 12 inches | 900 | Subflooring. |
| | ..... | 2- by 6-inch shiplap | 2,100 | Deck floor. |
| Tar-roofing felt | [1] 9 | ..... | ..... | Use between flooring. |
| Ties | 14 | 1 by 6 inches by 26 feet | 182 | Two 1- by 6-inch, nailed together. |
| Bracing | 4 | 2 by 6 inches by 18 feet | 72 | Knee braces, each 9 feet long. |
| | 20 | 2 by 6 inches by 10 feet | 200 | Post braces, each 5 feet long. |
| | 17 | 2 by 6 inches by 12 feet | 204 | Lower collar beams. |
| | 6 | .....do | 72 | Upper collar beams, each 4 feet long. |
| | 11 | .....do | 132 | Truss braces. |
| Joist framing | 5 | 2 by 12 inches by 16 feet | 160 | For framing between joists. |
| Bridging, railing, and studding. | ..... | 2 by 4 inches by 360 feet | 240 | |
| Stair carriages | 2 | 2 by 12 inches by 14 feet | 56 | |
| Stair treads | 3 | 2 by 10 inches by 14 feet | 70 | |
| Siding, gabling, mortar boxes, and forms. | ..... | 1 by 12 inches by 750 feet | 750 | |
| Total | ..... | ..... | 9,501 | |

[1] Squares.

Roofing: 70 pieces, 8 feet long—11.20 squares, corrugated or V-crimp metal roofing; 70 pieces, 9 feet long—12.60 squares, corrugated or V-crimp metal roofing; total, 23.80 squares.

Ridge roll, 75 feet.

For post piers and 3-inch vat floor of concrete having a mixture of 1 part of cement, 2½ parts of sand, and 5 parts of gravel—50 bags of cement, 5 cubic yards of sand, 10 cubic yards of gravel.

16 ⅝- by 12-inch bolts and washers for bolting beams to posts.

Dowel pins 16 to 18 inches long in concrete piers, ⅞-inch round iron, or ¾-inch pipe.

226803°—40——3

## Table 1.—*Bill of materials for various types of single-still and double-still buildings*—Continued

SINGLE-STILL BUILDING, PLAN C (FIG. 6)

| Item | Pieces | Dimensions | Board measure | Remarks |
|---|---|---|---|---|
| | *Number* | | *Feet* | |
| Posts | 8 | 8 by 8 inches by 16 feet | 683 | Outside posts. |
| | 4 | 8 by 8 inches by 8 feet | 171 | Inside posts. |
| Beams | 4 | 4 by 10 inches by 26 feet | 347 | |
| | 3 | 4 by 10 inches by 14 feet | 140 | |
| Plates | 4 | 2 by 6 inches by 26 feet | 104 | Two 2- by 6-inch, nailed together. |
| | 4 | 2 by 6 inches by 14 feet | 56 | Do. |
| Rafters | 20 | 2 by 6 inches by 16 feet | 320 | |
| Purlins | 28 | 2 by 4 inches by 16 feet | 299 | For 18-inch overhang. |
| | 14 | 2 by 4 inches by 14 feet | 131 | |
| Barge boards | 4 | 1 by 6 inches by 16 feet | 32 | |
| Joists | 50 | 2 by 12 inches by 14 feet | 1,400 | |
| Flooring | ..... | 1 by 6, 8, 10, or 12 inches | 900 | Subflooring. |
| | ..... | 2- by 6-inch shiplap | 2,100 | Deck floor. |
| Tar-roofing felt | [1] 9 | ..... | ..... | Use between flooring. |
| Ties | 8 | 1 by 6 inches by 26 feet | 104 | |
| Bracing | 4 | 2 by 6 inches by 18 feet | 72 | Knee braces, each 9 feet long. |
| | 16 | 2 by 6 inches by 10 feet | 160 | Post braces, each 5 feet long. |
| | 10 | 2 by 6 inches by 12 feet | 120 | Lower collar beams. |
| | 4 | .....do | 48 | Upper collar beams, each 4 feet long. |
| | 6 | .....do | 72 | Truss braces. |
| Joist framing | 5 | 2 by 12 inches by 16 feet | 80 | For framing between joists. |
| Bridging, railing, and studding. | ..... | 2 by 4 inches by 360 feet | 240 | |
| Stair carriages | 2 | 2 by 12 inches by 14 feet | 56 | |
| Stair treads | 3 | 2 by 10 inches by 14 feet | 70 | |
| Siding, gabling, mortar boxes, and forms. | ..... | 1 by 12 inches by 750 feet | 750 | |
| Total | ..... | ..... | 8,455 | |

[1] Squares.

Roofing: 42 pieces, 8 feet long—6.72 squares, corrugated or V-crimp metal roofing; 42 pieces, 9 feet long—7.56 squares, corrugated or V-crimp metal roofing; total 14.28 squares.

Ridge roll, 45 feet.

For post piers and 3-inch vat floor of concrete having a mixture of 1 part of cement, 2½ parts of sand, and 5 parts of gravel—50 bags of cement, 5 cubic yards of sand, 10 cubic yards of gravel.

16 ⅝- by 12-inch bolts and washers for bolting beams to posts.

Dowel pins 12 to 18 inches long in concrete piers, ⅞-inch round iron, or ¾-inch pipe.

Table 1.—*Bill of materials for various types of single-still and double-still buildings*—Continued

SINGLE-STILL BUILDING, PLAN D (FIG. 7)

| Item | Pieces | Dimensions | Board measure | Remarks |
|---|---|---|---|---|
| | *Number* | | *Feet* | |
| Posts | 8 | 8 by 8 inches by 16 feet | 683 | Outside posts. |
| | 4 | 8 by 8 inches by 8 feet | 171 | Inside posts. |
| | 2 | 6 by 6 inches by 12 feet | 72 | Rosin-shed end posts. |
| | 6 | 6 by 6 inches by 8 feet | 144 | Rosin-shed posts. |
| Beams | 3 | 4 by 10 inches by 26 feet | 260 | |
| | 4 | 4 by 10 inches by 14 feet | 187 | |
| Plates | 12 | 2 by 6 inches by 26 feet | 312 | Two 2- by 6-inch, nailed together. |
| | 4 | 2 by 6 inches by 14 feet | 56 | Do. |
| Rafters | 48 | 2 by 6 inches by 16 feet | 768 | |
| Purlins | 56 | 2 by 4 inches by 16 feet | 598 | For 18-inch overhang. |
| | 42 | 2 by 4 inches by 14 feet | 392 | |
| Barge boards | 8 | 1 by 6 inches by 16 feet | 64 | |
| Joists | 50 | 2 by 12 inches by 14 feet | 1,400 | |
| Flooring | | 1 by 6, 8, 10, or 12 inches | 900 | Subflooring. |
| | | 2- by 6-inch shiplap | 2,100 | Deck flooring. |
| Tar-roofing felt | [1] 9 | | | Use between flooring. |
| Ties | 20 | 1 by 6 inches by 26 feet | 260 | Two 1- by 6-inch, nailed together. |
| Bracing | 4 | 2 by 6 inches by 18 feet | 72 | Knee braces, each 9 feet long. |
| | 24 | 2 by 6 inches by 10 feet | 240 | Post braces, each 5 feet long. |
| | 24 | 2 by 6 inches by 12 feet | 288 | Lower collar beams. |
| | 8 | do | 96 | Upper collar beams, each 4 feet long. |
| | 15 | do | 180 | Truss braces. |
| Joist framing | 5 | 2 by 12 inches by 16 feet | 160 | For framing between joists. |
| Bridging, railing, and studding. | | 2 by 4 inches by 360 feet | 240 | |
| Stair carriages | 2 | 2 by 12 inches by 14 feet | 56 | |
| Stair treads | 3 | 2 by 10 inches by 14 feet | 70 | |
| Siding, gabling, mortar boxes, and forms. | | 1 by 12 inches by 750 feet | 750 | |
| Total | | | 10,519 | |

[1] Squares.

Roofing: 98 sheets, 8 feet long—15.68 squares corrugated or V-crimp metal roofing; 98 sheets 9 feet long—17.64 squares corrugated or V-crimp metal roofing; total, 33.32 squares.

Ridge roll, 110 feet.

For post piers and 3-inch vat floor of concrete having a mixture of 1 part of cement, 2½ parts of sand, and 5 parts of gravel—60 bags of cement, 6 cubic yards of sand, 12 cubic yards of gravel.

16 ⅝- by 12-inch bolts and washers for bolting beams to posts.

20 dowel pins 18 inches long in concrete piers, ⅞-inch round iron, or ¾-inch pipe.

Table 1.—*Bill of materials for various types of single-still and double-still buildings*—Continued

DOUBLE-STILL BUILDING, PLAN E (FIG. 8)

| Item | Pieces | Dimensions | Board measure | Remarks |
|---|---|---|---|---|
| | *Number* | | *Feet* | |
| Posts | 12 | 8 by 8 inches by 16 feet | 1,024 | Outside, main building posts. |
| | 12 | 8 by 8 inches by 8 feet | 512 | Inside, main building posts. |
| | 6 | 6 by 6 inches by 8 feet | 144 | Rosin-shed posts. |
| Beams | 10 | 4 by 10 inches by 26 feet | 867 | |
| | 5 | 4 by 10 inches by 14 feet | 233 | |
| Plates | 12 | 2 by 6 inches by 26 feet | 312 | Two 2- by 6-inch, nailed together. |
| | 6 | 2 by 6 inches by 14 feet | 84 | Do. |
| Rafters | 32 | 2 by 8 inches by 22 feet | 939 | For main building. |
| | 16 | 2 by 8 inches by 32 feet | 683 | For rosin shed. |
| Purlins | 62 | 2 by 4 inches by 16 feet | 661 | For 18-inch overhang. |
| | 93 | 2 by 4 inches by 14 feet | 868 | |
| Barge boards | 8 | 1 by 6 inches by 22 feet | 88 | |
| Joists | 122 | 2 by 12 inches by 14 feet | 3,146 | |
| Flooring | | 1 by 6, 8, 10, or 12 inches | 2,250 | Subflooring. |
| | | 2-inch shiplap | 5,150 | Deck floor. |
| Tar-roofing felt | [1] 22 | | | Use between flooring. |
| Ties | 24 | 2 by 6 inches by 20 feet | 480 | Two 2- by 6-inch, nailed together, for main building. |
| | 12 | 1 by 6 inches by 26 feet | 156 | Two 1- by 6-inch, nailed together, for rosin shed. |
| Bracing | 12 | 2 by 6 inches by 12 feet | 144 | Knee braces. |
| | 34 | 2 by 6 inches by 10 feet | 340 | Post braces, each 5 feet long. |
| | 16 | 2 by 6 inches by 18 feet | 288 | Lower collar beams for main building. |
| | 8 | 2 by 6 inches by 14 feet | 112 | Upper collar beams for main building. |
| | 9 | 2 by 6 inches by 16 feet | 144 | Truss braces for main building. |
| | 36 | do | 576 | Rosin-shed rafter braces. |
| Joist framing | 8 | do | 256 | For framing between joists. |
| Bridging, railing, and studding. | | 2 by 4 inches by 900 feet | 600 | |
| Stair carriages | 2 | 2 by 12 inches by 14 feet | 56 | |
| Stair treads | 3 | 2 by 10 inches by 14 feet | 70 | |
| Siding, gabling, mortar boxes, and forms. | | 1 by 12 inches by 1,200 feet | 1,200 | |
| Total | | | 21,383 | |

[1] Squares.

Roofing: 170 sheets, 12 feet long—40.80 squares, corrugated or V-crimp metal roofing; 68 sheets, 8 feet long—10.88 squares, corrugated or V-crimp metal roofing; total, 51.68 squares.

Ridge roll, 75 feet.

For post piers and 3-inch vat floor of concrete having a mixture of 1 part of cement, 2½ parts of sand, and 5 parts of gravel—100 bags of cement, 9½ cubic yards of sand, and 19 cubic yards of gravel.

24 ⅝- by 12-inch bolts and washers for bolting beams to posts.

30 dowel pins 18 inches long in concrete piers, ⅞-inch round iron, or ¾-inch pipe.

Table 1.—*Bill of materials for various types of single-still and double-still buildings*—Continued

DOUBLE-STILL BUILDING, PLAN F (FIG. 9)

| Item | Pieces | Dimensions | Board measure | Remarks |
|---|---|---|---|---|
| | *Number* | | *Feet* | |
| Posts | 12 | 8 by 8 inches by 16 feet | 1,024 | Outside posts. |
| | 12 | 8 by 8 inches by 8 feet | 512 | Inside posts. |
| Beams | 10 | 4 by 10 inches by 26 feet | 867 | |
| | 5 | 4 by 10 inches by 14 feet | 233 | |
| Plates | 8 | 2 by 6 inches by 26 feet | 208 | Two 2- by 6-inch, nailed together. |
| | 4 | 2 by 6 inches by 14 feet | 56 | Do. |
| Rafters | 32 | 2 by 8 inches by 22 feet | 939 | For 18-inch overhang. |
| Purlins | 40 | 2 by 4 inches by 16 feet | 427 | |
| | 60 | 2 by 4 inches by 14 feet | 560 | |
| Barge boards | 4 | 1 by 6 inches by 22 feet | 44 | |
| Joists | 122 | 2 by 12 inches by 14 feet | 3,416 | |
| Flooring | | 1 by 6, 8, 10, or 12 inches | 2,250 | Subflooring. |
| | | 2-inch shiplap | 5,150 | Deck floor. |
| Tar-roofing felt | [1] 22 | | | Use between flooring. |
| Ties | 24 | 2 by 6 inches by 20 feet | 480 | Two 2- by 6-inch, nailed together. |
| Bracing | 12 | 2 by 6 inches by 12 feet | 144 | Knee braces. |
| | 28 | 2 by 6 inches by 10 feet | 280 | Post braces, each 5 feet long. |
| | 16 | 2 by 6 inches by 18 feet | 288 | Lower collar beams. |
| | 8 | 2 by 6 inches by 14 feet | 112 | Upper collar beams. |
| | 9 | 2 by 6 inches by 16 feet | 144 | Truss braces. |
| Joist framing | 8 | 2 by 12 inches by 16 feet | 256 | For framing between joists. |
| Bridging, railing, and studding. | | 2 by 4 inches by 900 feet | 600 | |
| Stair carriages | 2 | 2 by 12 inches by 14 feet | 56 | |
| Stair treads | 3 | 2 by 10 inches by 14 feet | 70 | |
| Siding, gabling, mortar boxes, and forms. | | 1 by 12 inches by 1,200 feet | 1,200 | |
| Total | | | 19,316 | |

[1] Squares.

Roofing: 136 pieces, 12 feet long—32.64 squares, corrugated or V-crimp metal roofing.
Ridge roll, 75 feet.
For post piers and 3-inch rosin vat floors of concrete having a mixture of 1 part of cement, 2½ parts of sand, and 5 parts of gravel—80 bags of cement, 7½ cubic yards of sand, and 15 cubic yards of gravel.
24 ⅝- by 12-inch bolts and washers for bolting beams to posts.
24 dowel pins 18 inches long in concrete piers, ⅞-inch round iron, or ¾-inch pipe.

Table 1.—*Bill of materials for various types of single-still and double-still buildings*—Continued

DOUBLE-STILL BUILDING, PLAN G (FIG. 10)

| Item | Pieces | Dimensions | Board measure | Remarks |
|---|---|---|---|---|
| | *Number* | | *Feet* | |
| Posts | 12 | 8 by 8 inches by 16 feet | 1,024 | Outside posts, main building. |
| | 6 | 8 by 8 inches by 8 feet | 256 | Inside posts, main building. |
| | 8 | 6 by 6 inches by 8 or 9 feet | 192 | For rosin sheds use 9-foot posts if still floor is 9 feet 6 inches high. |
| Beams | 4 | 4 by 10 inches by 14 feet | 187 | |
| | 6 | 4 by 10 inches by 26 feet | 520 | |
| Plates | 4 | 2 by 6 inches by 14 feet | 56 | Two 2- by 6-inch, nailed together. |
| | 16 | 2 by 6 inches by 26 feet | 416 | Do. |
| Rafters | 60 | 2 by 6 inches by 16 feet | 960 | |
| Purlins | 56 | 2 by 4 inches by 16 feet | 597 | For 18-inch overhang. |
| | 70 | 2 by 4 inches by 14 feet | 653 | |
| Barge boards | 8 | 1 by 6 inches by 22 feet | 88 | |
| Joists | 72 | 2 by 12 inches by 14 feet | 2,016 | |
| Flooring | | 1 by 6, 8, 10, or 12 inches | 1,400 | Subflooring. |
| | | 2-inch shiplap | 3,200 | Deck floor. |
| Tar-roofing felt | [1] 16 | | | Use between flooring. |
| Ties | 60 | 1 by 6 inches by 26 feet | 780 | Two 1- by 6-inch, nailed together. |
| Bracing | 12 | 2 by 6 inches by 12 feet | 144 | Knee braces. |
| | 32 | 2 by 6 inches by 10 feet | 320 | Post braces, each 5-feet long. |
| | 12 | 2 by 6 inches by 12 feet | 144 | Lower collar beams. |
| | 6 | 2 by 6 inches by 10 feet | 60 | Upper collar beams. |
| | 18 | 2 by 6 inches by 12 feet | 216 | Truss braces. |
| Joist framing | 8 | 2 by 12 inches by 16 feet | 256 | For framing between joists. |
| Bridging, railing, and studding. | | 2 by 4 inches by 900 feet | 600 | |
| Stair carriages | 2 | 2 by 12 inches by 14 feet | 56 | |
| Stair treads | 3 | 2 by 10 inches by 14 feet | 70 | |
| Siding, gabling, mortar boxes, and forms. | | 1 by 12 inches by 1,800 feet | 1,800 | |
| Total | | | 16,011 | |

[1] Squares.

Roofing: 124 sheets, 9 feet long—22.32 squares, corrugated or V-crimp metal roofing; 124 sheets, 8 feet long—19.84 squares, corrugated or V-crimp metal roofing; total, 42.16 squares.
Ridge roll, 130 feet.
For post piers and 3-inch rosin shed floors of concrete having a mixture of 1 part of cement, 2½ parts of sand, and 5 parts of gravel—100 bags of cement, 9½ cubic yards of sand, and 19 cubic yards of gravel.
24 ⅝- by 12-inch bolts and washers for bolting beams to posts.
26 dowel pins 18 inches long in concrete piers, ⅞-inch round iron, or ¾-inch pipe.

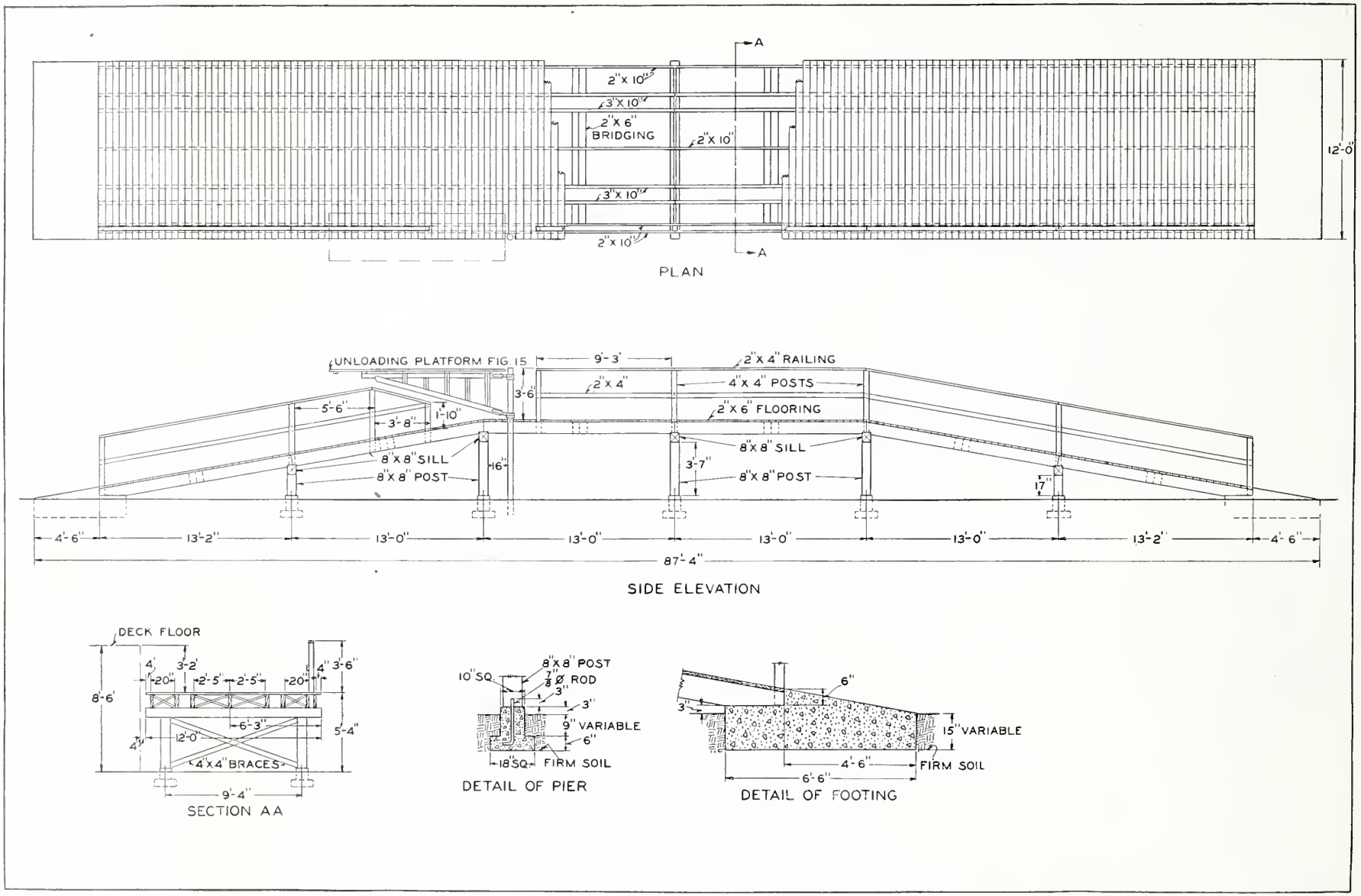


Figure 11.—*Design for ramp similar to one in use at Naval Stores Station, Olustee, Fla.*

## Cost of Still Buildings

It is impossible to give an estimate on the cost of construction of the still buildings of the various types and sizes recommended, since the cost of lumber and labor, the major items, varies with conditions and the facilities available for construction work. Some operators furnish their own lumber and labor, and consequently their building costs will be comparatively low. Purchasing lumber and hiring carpenters will make the cost much higher.

Table 2 has been prepared to aid in estimating the cost of constructing the various types of still buildings. It lists each type of still building, its floor area, lumber requirements, and relative cost as compared with that of the other six types. Plan C (fig. 6) costs the least. The cost of the others will be in direct proportion to the amount of lumber required. The bills of materials also should enable any experienced carpenter to estimate accurately the cost of the still building. On the basis of figures obtained in 1938, it is estimated that a building constructed in accordance with plan C will cost from $600 to $750. The cost of constructing a ramp is not included in this estimate.

The relative cost of various types of ramps is discussed under Ramps for Still Buildings.

Table 2.—*Floor area, lumber requirements, and relative cost of various types of still buildings*

| Plan | Figure No. | Type of lay-out | Area of deck floor | Floor area of rosin shed | Lumber required | Roofing required | Relative cost [1] |
|---|---|---|---|---|---|---|---|
| | | | *Sq. ft.* | *Sq. ft.* | *Ft. b. m.* | *Squares* | |
| A | 4 | Single still; rosin shed at end of building | 1,014 | 676 | 9,501 | 23.8 | 2 |
| B | 5 | Single still; rosin shed at side of building | 1,014 | 676 | 9,501 | 23.8 | 2 |
| C | 6 | Single still; no rosin shed | 1,014 | (2) | 8,455 | 14.28 | 1 |
| D | 7 | Single still, gravity type | 1,014 | 1,352 | 10,519 | 33.32 | 3 |
| E | 8 | Double still; rosin shed on entire side of building | 2,535 | 1,690 | 21,653 | 51.68 | 6 |
| F | 9 | Double still; no rosin shed | 2,535 | (2) | 19,316 | 32.64 | 5 |
| G | 10 | Double still; rosin shed at each end of building | 1,690 | 1,352 | 16,011 | 42.16 | 4 |

[1] The various plans are numbered consecutively according to cost, 1 designating the lowest.
[2] None. Rosin vat is located under deck floor.

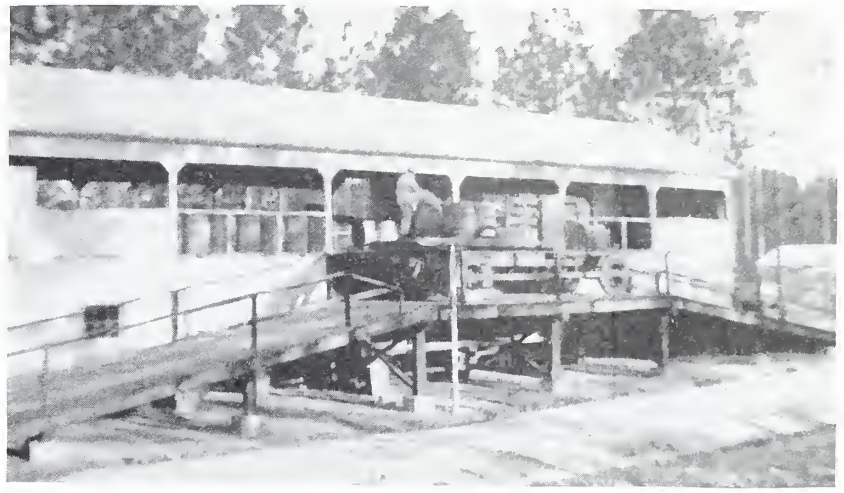

Figure 12.—*Ramp at Naval Stores Station, Olustee, Fla.*

## Ramps for Still Buildings

A ramp is an essential part of a still building, unless the building is on a hillside. All the plans of the still building show the proper location of the ramp. In some of the plans two or more locations are shown, making it possible to locate the ramp on the side most accessible to the driveway to the still building.

The ramps shown are designed for a deck floor 8 feet 6 inches high, the height for the usual set of three strainers. If, however, it is planned to use four strainers, this height should be increased to 9 feet 6 inches, and correspondingly longer posts for the ramp should be provided. The increased height will increase the length of the ramp.

A ramp similar in design to the one in use at the Naval Stores Station is shown in figure 11. The posts of this ramp rest on concrete foundations, and concrete approaches as well as guard rails with an unloading platform are provided. Figure 12 shows this ramp installed at the station.

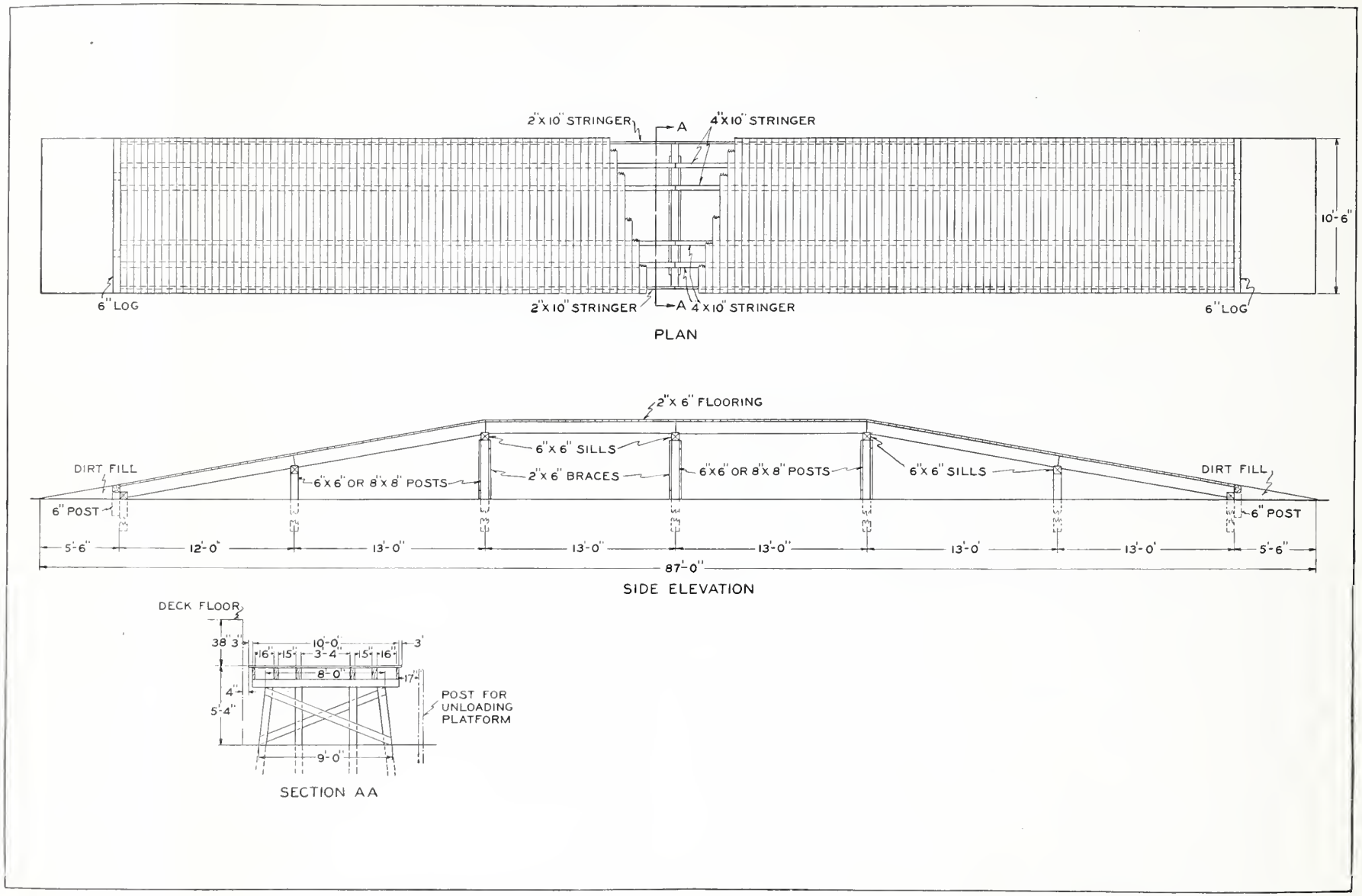


Figure 13.—*Post ramp.*

Another ramp (fig. 13), much cheaper to construct, is supported by posts extending into the ground 3 or 4 feet and resting on firm footings.

A dirt-filled ramp is often used (fig. 14). The sides are held in place by walls made of small logs or planks held by posts sunk into the ground. In addition, logs are often put into the fill to hold the ground in place. To prevent truck tires from cutting into the filled ground, chips from the still may be spread over the roadbed of the ramp.

An unloading platform that can be used with the above types of ramps is shown in figure 15.

Figure 14.—*Dirt-filled ramp.*

## Specifications for Construction of Copper Turpentine Fire Still

The specifications according to which the still and worm at the Naval Stores Station were built are given as a guide for the purchase of a 25-barrel [1] fire still and worm.

The fire still shall be built in accordance with the following specifications and the drawing shown in figure 16.

### Material Requirements

The still shall be constructed of sheet copper, in accordance with Federal Specification No. QQ–C–501. The bottom shall be made of No. 3 Stubs gage sheet copper 0.259 inch thick. The sides shall be made of No. 11 Stubs gage sheet copper 0.120 inch thick. The top and collars shall be made of No. 13 Stubs gage sheet copper 0.095 inch thick.[2]

All brass angles and rings shall be rolled brass, the composition of which is in accordance with Federal Specification No. QQ–B–611.

### Construction

The bottom of the still shall be brazed to the sides. Neat workmanship is required.

The seam on the side of the still shall be brazed. The metal at or near the brazed seam shall not, at any point, be less than 0.120 inch thick, the thickness of the sheet.

The top shall be riveted to the sides with No. 5 braziers' countersunk rivets on 6-inch centers and then brazed, making a leakproof and sweatproof job. Neat workmanship is required.

The collars shall be riveted to the top with No. 4 braziers' rivets, 3-inch centers, and sweat-soldered with solder of high melting point.

The still and cap shall be shaped as shown in the accompanying drawing and of the exact dimensions specified. The bottom and sides of the still shall be hammered hard before delivery.

[1] The rated capacity of a turpentine still is stated as the number of 31½-gallon barrels it holds when filled to the collar.

[2] A still made of the following Stubs gage sheet copper is often used: Bottom, No. 4; sides, No. 11; breast, No. 11; cap and worm, No. 16.

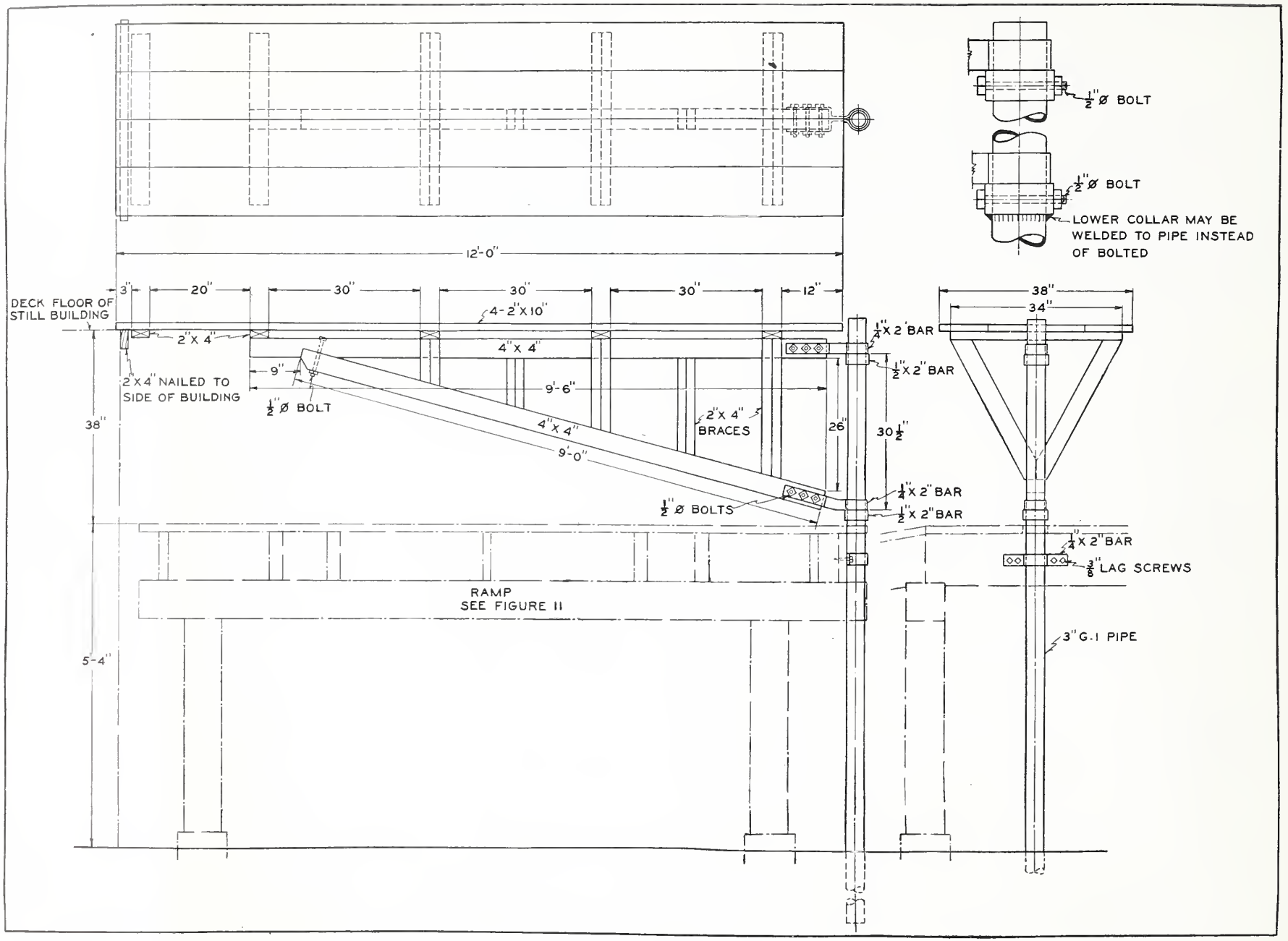


Figure 15.—*Unloading platform.*

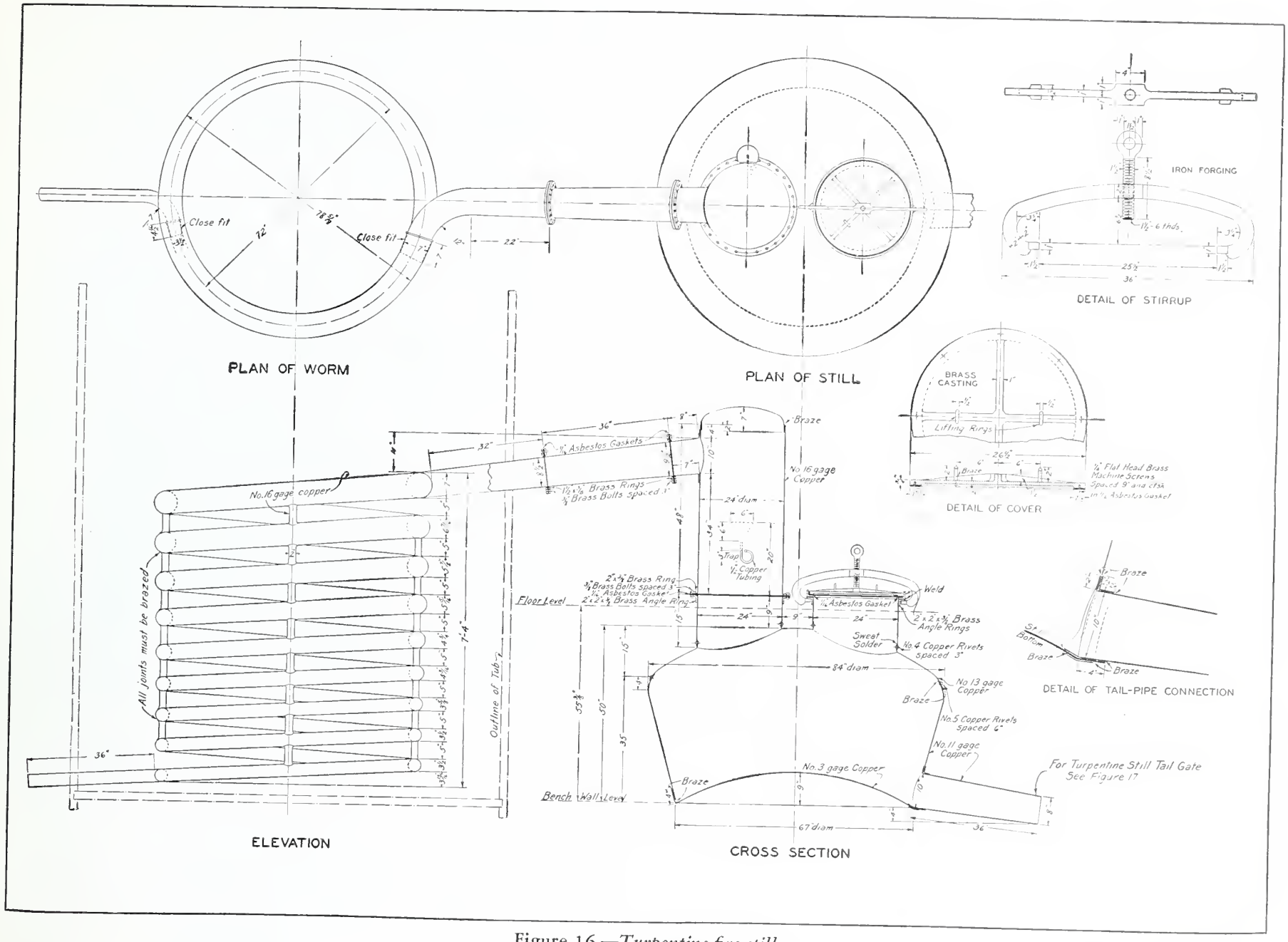


Figure 16.—*Turpentine fire still.*

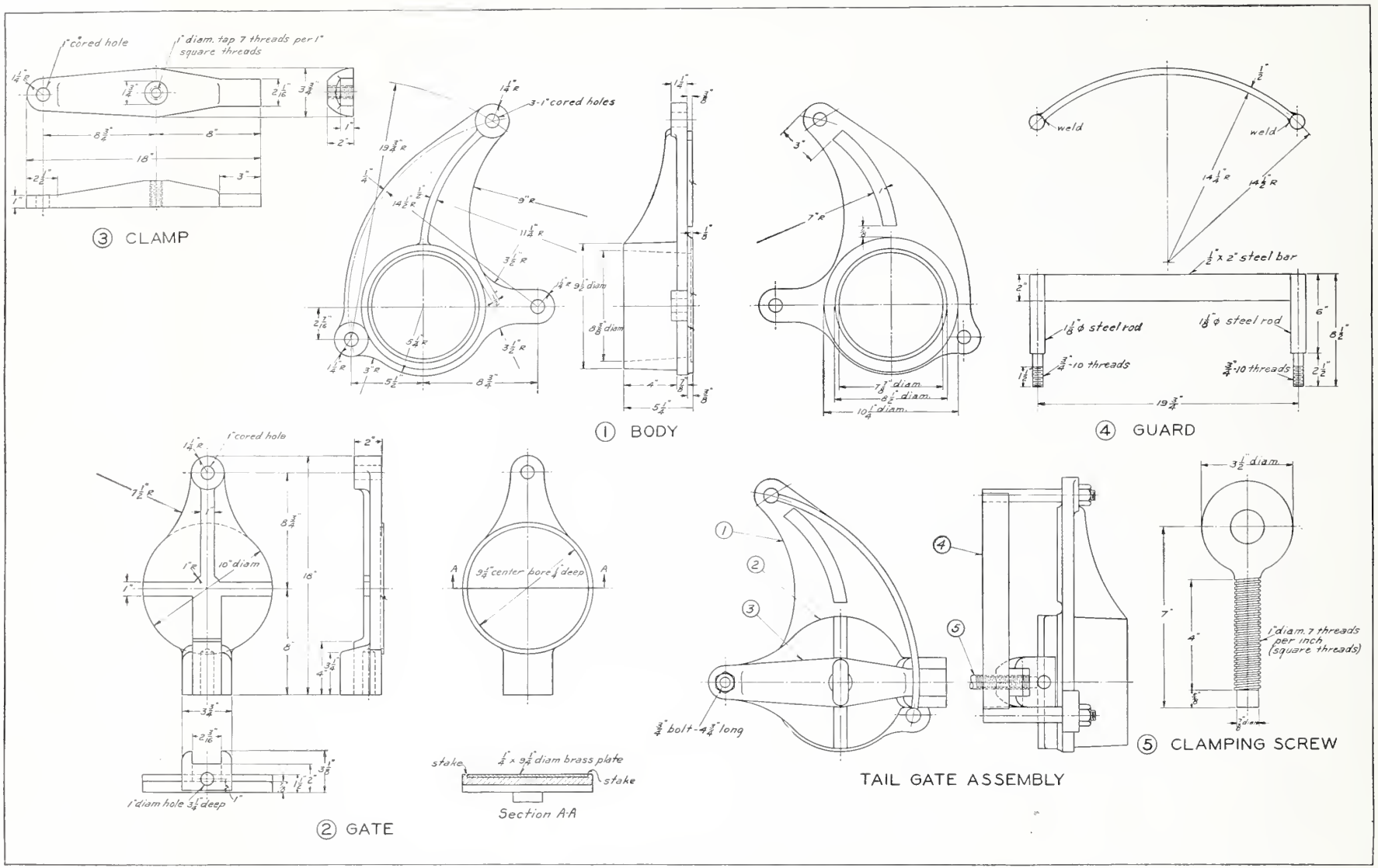


Figure 17.—*Tail gate for turpentine still.*

Before delivery the still shall withstand a water test for leaks. It shall also withstand another test for leaks and sweats after installation on its foundation walls.

All gasket joints shall be made tight to turpentine vapors, and all gaskets used shall be of the type that does not sweat.

The charging-hole cover plate shall be made of cast brass or bronze.

The tail pipe shall be in accordance with the drawing shown in figure 16. It shall be well brazed to the sides and bottom of the still, and then a reinforcing flange shall be brazed on the outside of the still and tail pipe.

The still is to be furnished complete with an 8-inch cast-iron tail gate brazed to the tail pipe (fig. 17).

A tapering arm 3 feet long shall be provided. The taper shall be from 9½ to 8½ inches in diameter. Brass flange connection shall be provided as shown in figure 16.

The cap shall have the dimensions and shape shown in figure 16. It shall be made of No. 16 Stubs gage sheet copper. All joints in the cap shall be brazed. The cap shall have a neat appearance and be entirely free of prominent hammer marks. Brazed joints shall be difficult to detect without close observation.

The arm connection to the cap shall be flanged and brazed securely to the cap.

## Specifications for Construction of Turpentine Still Worm

A worm condenser with a diameter graduated from 8½ inches at the mouth to 3½ inches at the bottom, complete for connection to the still and for installation in a tub of 10-foot inside diameter shall be furnished.

### Material Requirements

The condensing worm shall be made of No. 16 Stubs gage sheet copper 0.065 inch thick and shall be constructed in accordance with Federal Specification No. QQ-C-501.

The worm shall be made according to dimensions indicated in figure 16. There shall be 8½ turns to the coil, the diameter across the top of the coil shall be approximately 6½ feet, and the diameter of the tubing shall be graduated from 8½ inches at the arm connection to 3½ inches at the worm tail pipe. The overall height of the coil shall be approximately 7 feet 4 inches.

### Construction

The coils shall be formed as neatly as possible without large kinks in the tubing on the inside of the worm. All joints shall be brazed. In brazing the longitudinal seam to make up the coil care must be exercised so that the thickness of the copper sheet next to the seam is not reduced by burning. All tubing connections shall be brazed.

The elbow connecting the worm proper to the arm shall be approximately 32½ inches long from the inside of the connection to the worm to the outside of the flange connection to the arm. A brass flange connection shall be provided for connecting the elbow to the arm. Asbestos gaskets that are sweat-proof and resistant to turpentine vapors shall be provided for this flange. This elbow shall be connected with the worm proper by means of a tapered fit as shown in the drawing.

The exhaust elbow shall be connected with the worm by means of a tapered fit as shown in the drawing. It shall be 36 inches long measured from the inside of the elbow to the outer edge of the tail pipe.

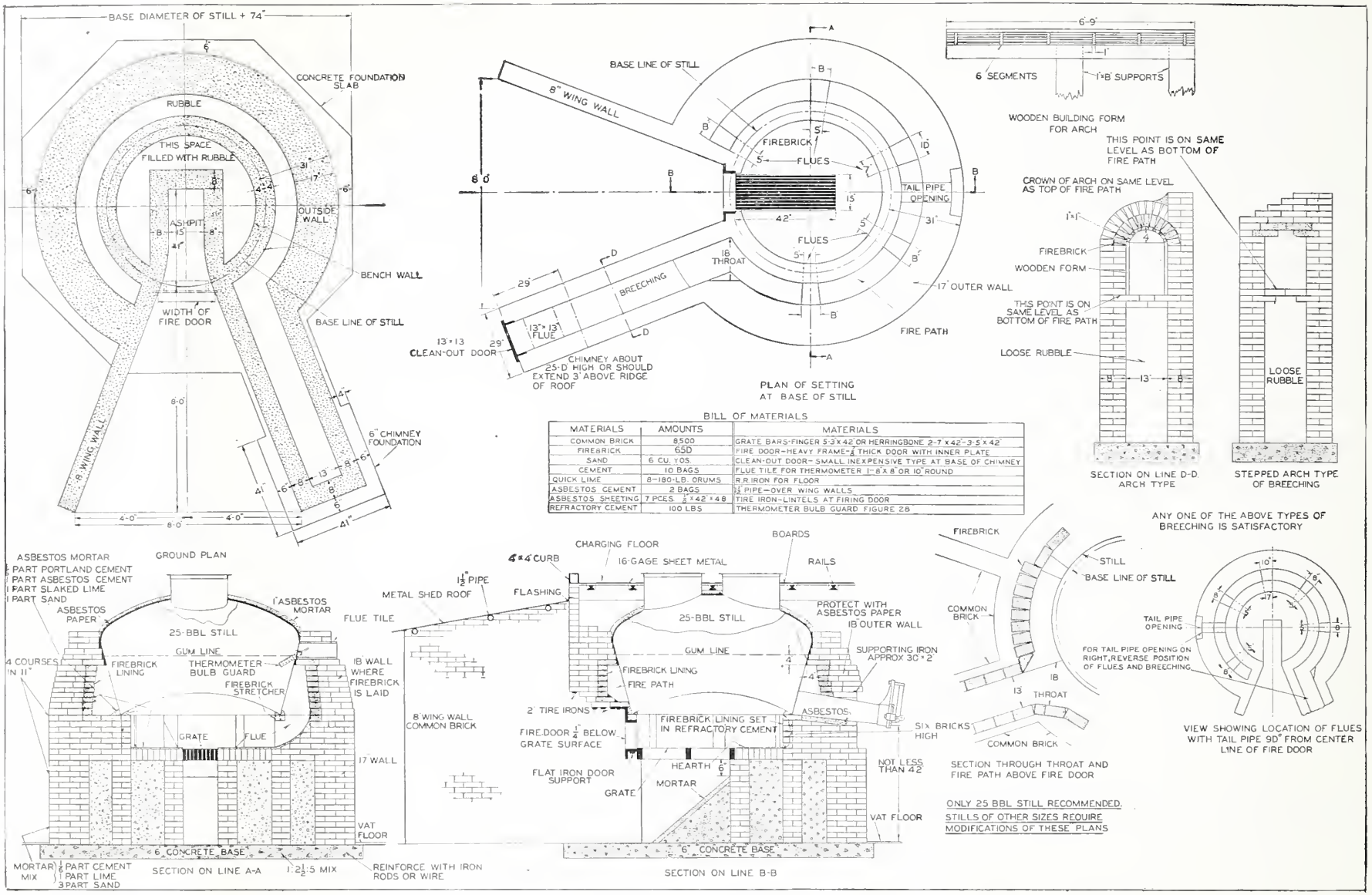


Figure 18.—*Turpentine fire still setting.*

## Guarantee of Workmanship

The contractor shall guarantee all work against defects of workmanship and materials for 1 year after formal acceptance by the purchaser, and where defects develop because of imperfect workmanship or materials, shall make the necessary repairs in the way of labor and materials at no expense to the purchaser.

## Directions for Setting Fire Still

### Testing of Still

When the still is delivered to the still site, set it level on timbers and fill with water. Examine all joints carefully from time to time for leaks. Make all necessary repairs before placing the still on the bench wall.

### Materials for Construction

Before beginning construction work on the setting of the still, have all the materials at the still site in the amounts listed under Bill of Materials in figure 18.

### Slaking Lime for Mortar

Quicklime instead of hydrated lime has been specified in the bill of materials because (1) it is cheaper, (2) it makes a satisfactory mortar, and (3) it is preferred by many brick masons. Quicklime, unlike hydrated lime, must be slaked before being used.

As quicklime must be slaked a day or so before it is used in mortar, one of the first steps in the construction of the still setting is to slake the quicklime. If a mortar box in which the lime can be slaked is not available, dig a pit 4 feet long by 3 feet wide by 2 feet deep in sandy ground and line the bottom with boards properly anchored so that they will not float. Empty a drum of quicklime into the pit and level it off. Before throwing water on the quicklime, make certain that several hoes are available. It is essential that at least 2 barrels of water be on hand for immediate use to prevent the lime from burning. About 1½ barrels are usually required for one 180-pound drum of quicklime. After the water has been added, stir well with the hoes. Add water until no further slaking is noted. After standing overnight, the slaked quicklime will be ready for use in the mortar.

### Location of Still and Walls

Determine the proper location for the still in the building by consulting the building plans. By using the ground plan shown in figure 18 as a guide, roughly determine the outline of the still setting on the ground, making certain that the wing walls will clear the posts of the building. Prepare and level the ground for the foundation. Pack the earth well to provide a firm footing.

Mark the center of the still setting with a stake extending at least 6 inches above the ground, or level with the top of the still foundation.

The location of the still walls is determined by the diameter of the bottom of the still. Consequently, an accurate measurement of this diameter is essential.

Lay out the boundaries of the still walls on the ground prepared by marking circles. This can be done satisfactorily by means of nails driven into a board fastened at one end to the top of the center stake. In determining the location of the various nails, first measure off on the board, from the nail in the stake, a distance of one-half the base-line diameter of the still bottom (fig. 16). A nail driven into the board at this dis-

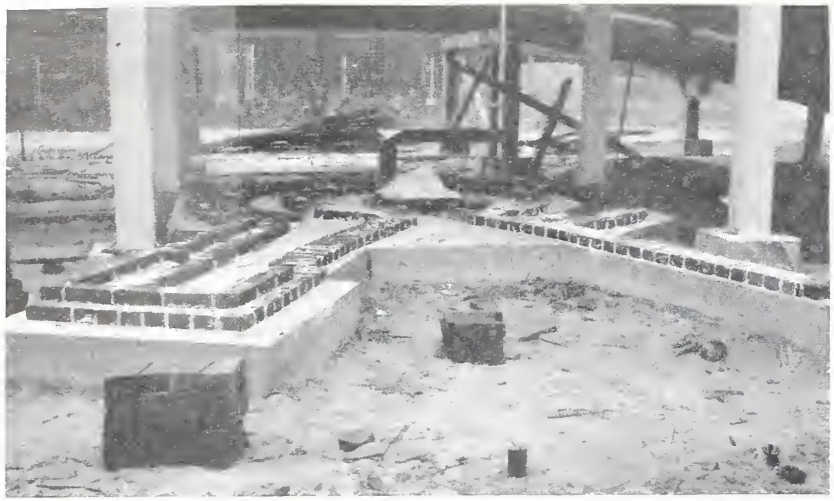

Figure 19.—*Concrete foundation for still setting.*

tance is the radius of the base line, or bottom of the still. The location of the other nails to mark the boundaries of the bench and outside walls can be determined by referring to Ground Plan of figure 18. The board can later be used to mark the circles indicating the location of the walls and base line of the still on the foundation.

Draw a line through the center of the proposed location of the ashpit and determine the position of the wing walls by using the dimensions shown in Ground Plan of figure 18.

## Concrete or Brick Foundation

A concrete foundation (fig. 19) having the dimensions shown in Ground Plan and Section on Line A–A of figure 18 is recommended. Use a concrete mixture of 5 parts of clean gravel, 2½ parts of clean sand, and 1 part of cement. Place the wooden forms for the foundation on level, firm ground, so that the space between opposite sides is equal to the base diameter of the bottom of the still plus 74 inches. For example, assume that the base diameter of the still is 65 inches. Then the space between the opposite sides of the octagon-shaped concrete form is 65+74, or 139 inches, with the center stake midway between the two sides.

For a temporary setting, a brick foundation is often used instead of the concrete foundation shown in the drawing. On solid or well-packed level ground lay a dry (without mortar) stretcher course of brick extending about 2 inches beyond the circle marking the outside boundary of the outside wall. Then completely fill the whole space inside this outside or stretcher course with brick laid header. Fill in this first course wall with the mortar used in building the walls. Make this mortar by mixing 9 parts of sand, 3 parts of lime, and 1 part of cement. In laying the second course start the outside boundary of both the outside and bench walls with brick laid header and continue to fill in with all brick laid header. Fill all joints well with mortar. These two courses complete the brick foundation.

## Construction of Walls

After the concrete foundation has become hard, mark on its surface circles (Ground Plan of fig. 18) to indicate the inside and outside boundaries of both the bench and outside walls and then mark the boundaries of the ashpit, wing walls, and chimney.

Using mortar made of 18 parts of sand, 6 parts of lime, and 1 part of cement, lay first a header course of brick on the foundation inside the circles indicating the location of the bench and outside walls and the boundaries of ashpit, wing walls, and chimney. Above the first header course lay brick, common bond, with every sixth course laid header and the other courses laid stretcher.

For complete and rapid discharging, set the still with a pitch by building the bench wall on the side opposite the tail

pipe 1½ to 2 inches higher than the bench wall on the side of the tail pipe. To do this, beginning with the fifth course of brick above the foundation, lay the brick, for the bench wall only, with regular mortar joints on the low side and thick mortar joints on the high side. All the other walls are laid with level brick courses and uniform mortar joints. As the firebricks above the hearth level in the bench wall are not laid in mortar but are held together by thin refractory cement joints, the pitch to be given the still must be attained in building the bench wall up to the hearth level.

## Height of Bench Wall

To determine how high the bench wall must be built, first measure the total outside height of the kettle and collar and deduct from this height 3 inches, or the distance the collar will project above the top of the deck floor. The result is the distance the still extends below the top of the deck floor. Then measure the height from the still foundation to the top of the deck floor. Subtract from this height the distance the still extends below the top of the deck floor. The result is the height to which the bench wall must be built above the still foundation, and should be at least 42 inches, plus the slope of the tail pipe of the still. For example, if the total height of the still from the base to the top of the collar is 60 inches and the height of the collar above the top of the deck floor is to be 3 inches, then the distance the still extends below the top of the deck floor is 60 inches less 3, or 57 inches. From the top of the still foundation to the top of the deck floor is 102 inches. Then 102 inches less 57 leaves 45 inches, which, in this instance, is the height above the still foundation to which the bench wall is to be built.

If the height of the deck floor does not permit building the bench wall to a height above the vat floor of at least 42 inches plus the slope of the tail pipe of the still, alterations in the height of the deck floor or vat floor or both, or nesting the strainers, may be necessary to obtain the required clearance.

## Filling Between Walls

Build all walls to a height of 4½ to 5 inches below the level of the hearth, which is the height of the bench wall less the height of the framework of the fire door. Then completely fill the open space between the bench wall and the ashpit walls with brickbats and dry sand (fig. 20). Flush and cover with a thick coat of mortar. Fill the space between the bench wall and outside wall with brickbats or sand. Pack well, being careful not to crack the green walls.

## Setting Grate Bars and Hearth

Rest the rear end of the grates on about 2 inches of the rear wall of the ashpit, and the front end on an iron bar, such as an old wagon axle, small railroad iron, or heavy tire iron, approximately 2 by 2½ inches.

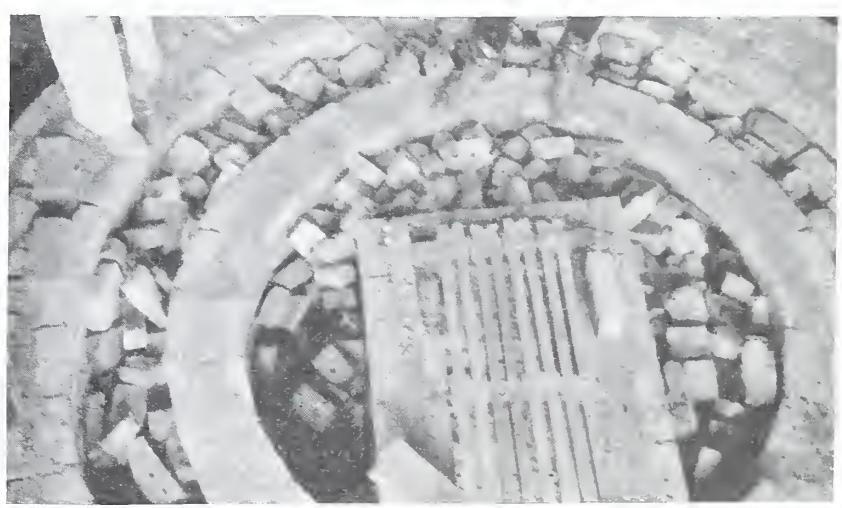

Figure 20.—*Filling between walls.*

Figure 21.—*Installation of fire door.*

After setting the grates, lay firebrick rowlock between the grates and the bench wall so that the top of the hearth or the top of the bricks will be one-fourth of an inch above the top of the grates. Do not use mortar between the joints, because these joints and the hearth are to be covered later with a very thin mixture of refractory cement.

## Installing Fire Door

Place a heavy iron bar (4 inches wide by 1 inch thick, or 2- by 2½-inch angle iron is satisfactory) on the bench wall to support the frame of the fire door so that the bottom of the opening will be about one-fourth of an inch below the top of the grates. Anchor this bar in the brickwork as the building of the bench wall is continued.

Bring all brickwork up to the top of the grate or level of the hearth. Set the fire door in place (fig. 21). Plumb and anchor it.

## Position of Flues

Before determining the position of the flues, decide which one of the two plans shown in figure 18 is to be used. If the tail pipe is to be opposite the fire door (fig. 22, *A*), use Plan of Setting at Base of Still (fig. 18). If, however, the tail pipe is to be at a right angle to the fire door (fig. 22, *B*), use the other

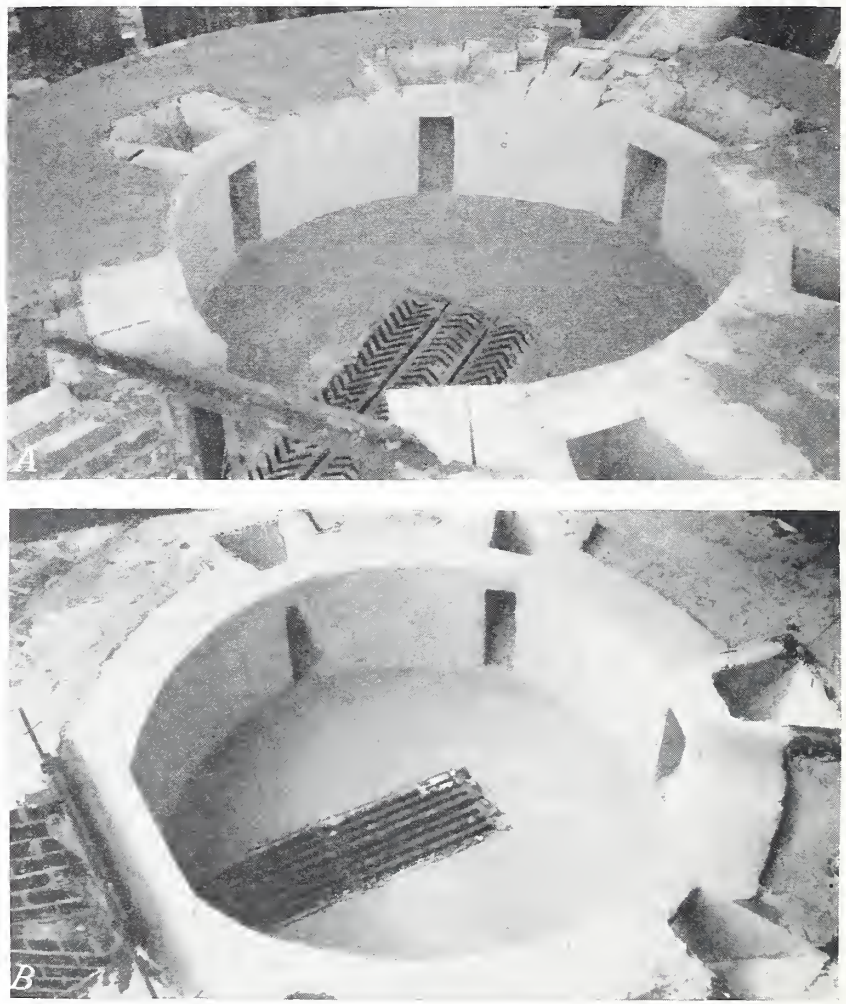


Figure 22.—*Tail pipe: A, Opposite fire door; B, at right angles to fire door.*

flue plan, View Showing Location of Flues with Tail Pipe 90° from Center Line of Fire Door.

First locate the position of the 7-inch or large flue. Lay out the remaining flues (using firebrick as shown in the drawing) in a manner that will require cutting the fewest number of brick. Give the flues the exact dimensions shown in Section on Line A–A (fig. 18).

## Finishing Bench Wall

In building the six courses of the bench wall above the level of the hearth, or up to the level of the top of the frame of the fire door, lay the first course of firebrick in asbestos-cement mortar mixed in the proportion of 6 parts of sand, 6 parts of asbestos cement, 6 parts of lime, and 1 part of Portland cement. Mix the usual batch of mortar, as it will be used later in the construction work. Make a true flat surface so that the firebrick of the remaining five courses will not rock when set in a refractory cement of the type recommended for wash coating and dipping bricks. Before laying the firebrick for the other five courses, dip them in the refractory cement, which has been thoroughly mixed with water to a thick creamy consistency. Lay the first four of these five courses with dipped joints in stretcher courses; lay the fifth header except over the flues, where the bricks are laid stretcher.

When completed, the top of the bench wall should have the slope required to give the still the 1½- to 2-inch pitch, and should be high enough to bring the collar of the still 3 inches above the deck floor and the tail gate at least 42 inches above the floor level of the rosin vat.

## Finishing Outside Wall up to Level of Bench Wall

In laying the outside wall up to the level of the top of the completed bench wall Section on Line B–B (fig. 18), beginning at the hearth level leave a recessed seat, approximately 5½ inches deep and 26 to 30 inches wide in the outside wall under the estimated position of the tail pipe and approximately 36 inches above the vat floor, to serve as a rest for the rosin trough extending from the tail gate to the top strainer. Also leave a clearance of three-quarters of an inch in the outside wall directly under the tail-pipe location shown in Section on Line B–B (fig. 18). This will be packed with dry asbestos after the still is put into place to prevent any strain on the tail pipe that might cause leaking where it is attached to the still, in case the bench wall and still should settle.

In building the outside wall above the level of the hearth, back up the firebricks in the bench wall so that they cannot be knocked out by the wood in firing the still.

When all brickwork has been built to the top of the bench wall on which the still is to rest, fill in and slope the bottom of the flues as shown in Section on Line A–A (fig. 18).

Prepare a portion of the refractory cement to the consistency of cream and pour it between the rowlocked brick of the hearth, completely filling all cracks.

Apply a brush coat of refractory-cement paste over the entire inside surface of the furnace walls to serve as a protection to the firebrick.

To secure the most satisfactory results, allow the brickwork to set for at least 12 hours so that the green mortar may harden before the still is placed on the bench wall.

## Placing Still on Bench Wall

Make the still ready for installation on the bench wall. Give it a final inspection for leaks. Put a ½- to ¾-inch coating of asbestos mortar (for composition, see Section on Line A–A, fig. 18) on the top of the bench wall. Lower the still carefully to the center of the bench wall with the tail pipe in the desired

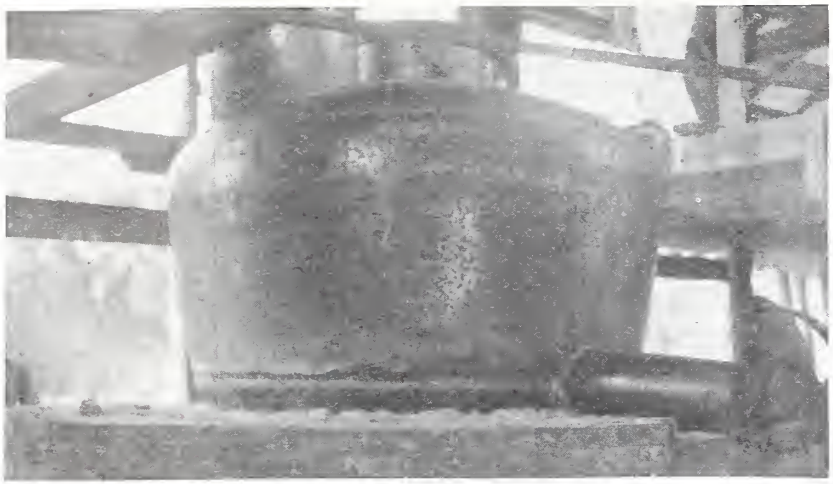

Figure 23.—*Still on bench wall.*

position. The still will bed itself in the mortar and have a uniform bearing on the bench wall.

When the still is in place (fig. 23), plaster the asbestos mortar against the bottom for several inches, both on the inside and outside of the furnace.

If the directions have been followed, the still will have a 3- to 3½-inch bearing on the bench wall, the ridge of the bottom of the still will rest on the center of the bench wall, there will be a ¾-inch space under the tail pipe, the still will have the desired pitch of 1½ to 2 inches, the top of the still collar will extend about 3 or 4 inches above the top of the deck floor, and the bottom of the tail gate will not be less than 42 inches above the vat floor.

Fill in the space underneath the tail pipe with dry ground asbestos.

## Building Fire Path

After the still has been placed correctly on the bench wall and plastered as described above, place in it eight large dip barrels of water (for a 25-barrel still). The water level indicates the location of the gum line, and should be marked on the outside of the still.

Draw a second mark on the still 4 inches below the mark denoting the gum line to indicate the top of the fire path.

By trial, determine the number of brick courses in the wall of the fire path necessary to reach the top of the fire path, indicated by the lower mark.

Lay the fire path with firebrick laid stretcher with dipped refractory-cement joints. Step the brick courses uniformly in toward the still, as shown by Section on Line A—A and Section on Line B—B (fig. 18). Make certain that the last stretcher course of firebrick is only 3½ to 4 inches from the still at the gum line. This course must be perfectly level.

Plaster the back of the firebrick with a thick coat of asbestos mortar, and back with common brick and ordinary mortar to complete the wall.

In building the fire path over the furnace door, lay the first course of brick header on heavy tire irons set in the wing walls and lay all the other courses as shown in Section on Line B—B.

Attach the thermometer-bulb guard to the still with the center

Figure 24.—*Course of firebrick holding asbestos paper in place.*

of the outside flange of the guard at the level of the gum line. For further information concerning thermometers and their installations, see page 34.

## Insulating Top of Still

Cover the entire top and sides of the still down to the top of the fire path with asbestos paper, cutting the ⅛- by 42- by 48-inch sheets into smaller pieces and soaking them in water before fitting them neatly over the top and uncovered sides of the still.

## Brickwork Above Fire Path

Cap the fire path with a header course of firebrick laid firmly in asbestos-cement mortar, the edge of the brick being about one-fourth inch away from the sides of the still. This header course of firebrick will hold the asbestos paper in place at its lower edge (fig. 24.)

Build the outside wall of the setting at least five or six courses of brick above the top of the fire path, using an asbestos-mortar joint about three-fourths of an inch thick between the asbestos paper and the brick.

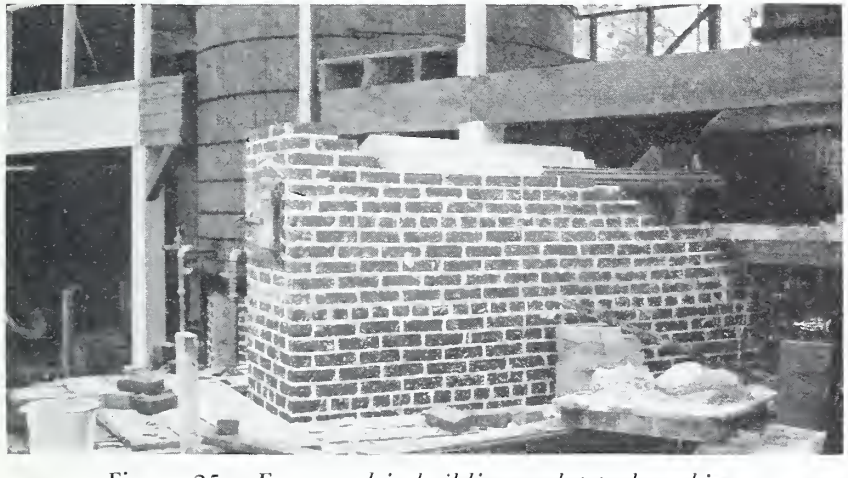

Figure 25.—*Form used in building arch-type breeching.*

Figure 26.—*Building stepped arch.*

Apply a 1- to 1½-inch coating of asbestos mortar over the paper-covered still above the last course of brick. This coating will develop drying or seasoning cracks and will have to be pressed down and refinished once or twice at intervals of several days during construction.

After the fire path has been capped, build either the arch- or stepped-arch type (figs. 25 and 26) breeching as shown in section drawing on Line D—D (fig. 18).

Insert a clean-out door in the breeching. The bottom of the door should be level with the fire path.

## Chimney

Build the wall of the chimney (fig. 27) 8 inches thick for about 15 courses above the top brick course of the breeching. Above this point a wall 4 inches thick is satisfactory.

Extend the chimney at least 3 feet above the ridge roll of the still building.

## Covering Wing Walls for Fire Protection

Build and slope the top of the wing walls as shown in Section on Line B—B (fig. 18) to a point about 6 or 7 inches below the top of the deck floor, inserting 1½- to 2-inch pipes in the wing walls to serve as supports for the metal roof over the furnace door. (See cover page.)

Build the fire-path wall above the furnace door up to the deck floor, to entirely enclose or seal off the space between the wing walls from the still building.

## Floor Joists and Flooring Above Still

Use railroad irons for floor joists directly over the still, and let the ends of the irons rest on heavy wood joists. These iron joists should not be longer than necessary, otherwise the deck floor will be too springy.

Figure 27.—*Chimney and wing walls.*

A section of flooring 12 feet square over the still, not joined to the other flooring of the building, is recommended.

Lay 1-inch subflooring on the iron rails or beams. Cover the subflooring with No. 28-gage galvanized-iron sheets. Cover this with 1-inch tongue-and-groove flooring. Place a 4- by 4-inch curbing on the upper deck floor on the side next to the roof of the furnace shed.

To build the inclined floor of the ashpit, fill the back of the ashpit with packed earth and brickbats, and cover with mortar as shown in Section on Line B—B (fig. 18).

## Installing Recording Thermometer

Recording-thermometer installations for turpentine stills are of several types. In one type the bulb is installed either through the breast of the still or the cover plate of the charging hole, and extends down below the gum line. A brass guard pipe protects the tubing and bulb from injury during the skimming. In another type the bulb extends through the side of the still

4 inches below the gum line. In the latter, the stem of the thermometer passes through the fire path and makes it necessary to protect the tubing from the high temperature of the flue gases. In the installation used at the Naval Stores Station, which is probably the most satisfactory type, the bulb enters the side of the kettle above the fire path at the gum line (fig. 1). A special type of guard (fig. 28), flanged to the still sides, holds the bulb in such a manner that it is always well covered by the gum. In this type the thermometer tubing does not pass through the fire path and is well protected by the heavy brass guard.

When the thermometer is installed through the side of the still, the opening through the outside wall and upper portion of the fire path should be at least 8 by 8 inches. Fire-clay flue lining 8 by 13 by 24 inches is often used.

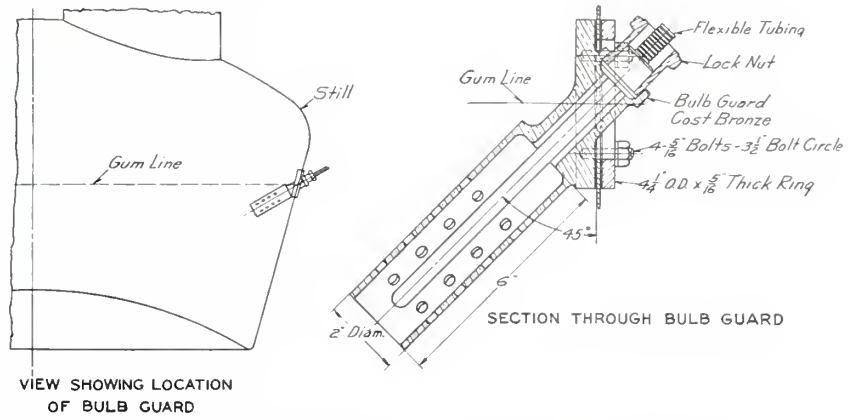


Figure 28.—*Thermometer-bulb guard for turpentine still.*

## Condenser Tub and Worm

A condenser tub 12 feet high and 10 feet in diameter is recommended. The foundation for the tub consists of either three straight walls or two semicircular walls (fig. 29) with a straight center wall. The walls of both types are 8 inches thick and may be built of either brick or concrete. They should rest on concrete footings 16 to 24 inches wide.

To fulfill the requirements of standard construction, the walls are usually built so that the bottom of the erected tub is at the same level as the top of the bench wall of the still. While 2- by 10-inch joists and framing are recommended, 4- by 6-inch joists may be used. In using the 2- by 10-inch joists, it is necessary to frame them at the ends and to bridge or frame them where they rest on the center wall.

An effective worm and an adequate supply of cold water, not warmer than 70° F., is needed to condense all the turpentine vapors from the kettle. For details of the construction of the worm, see figure 16. The worm is brazed throughout, and even if constructed of relatively heavy-gage copper, will need auxiliary 2- by 4-inch wooden supports to prevent floating. Worms with soldered joints corrode rapidly at all points adjacent to the wiped joints.

## Turpentine Separators and Dehydrators

Turpentine separators and dehydrators of proper design are necessary, if losses are to be kept to the minimum.

It has been estimated that the loss of turpentine from an uncovered separator at the average fire still may be 1 to 2 gallons per charge. To reduce this loss, a cool turpentine from the condenser is essential, and as a further aid a simple cover such as has been successfully used on the separator at the Naval Stores Station is recommended. This cover, shown in Sections A–A and B–B (fig. 30), prevents most of the evaporation which otherwise occurs at the discharge of the worm.

Water not separated from the turpentine at the still settles in the shipping container. It softens the glue of a glued package

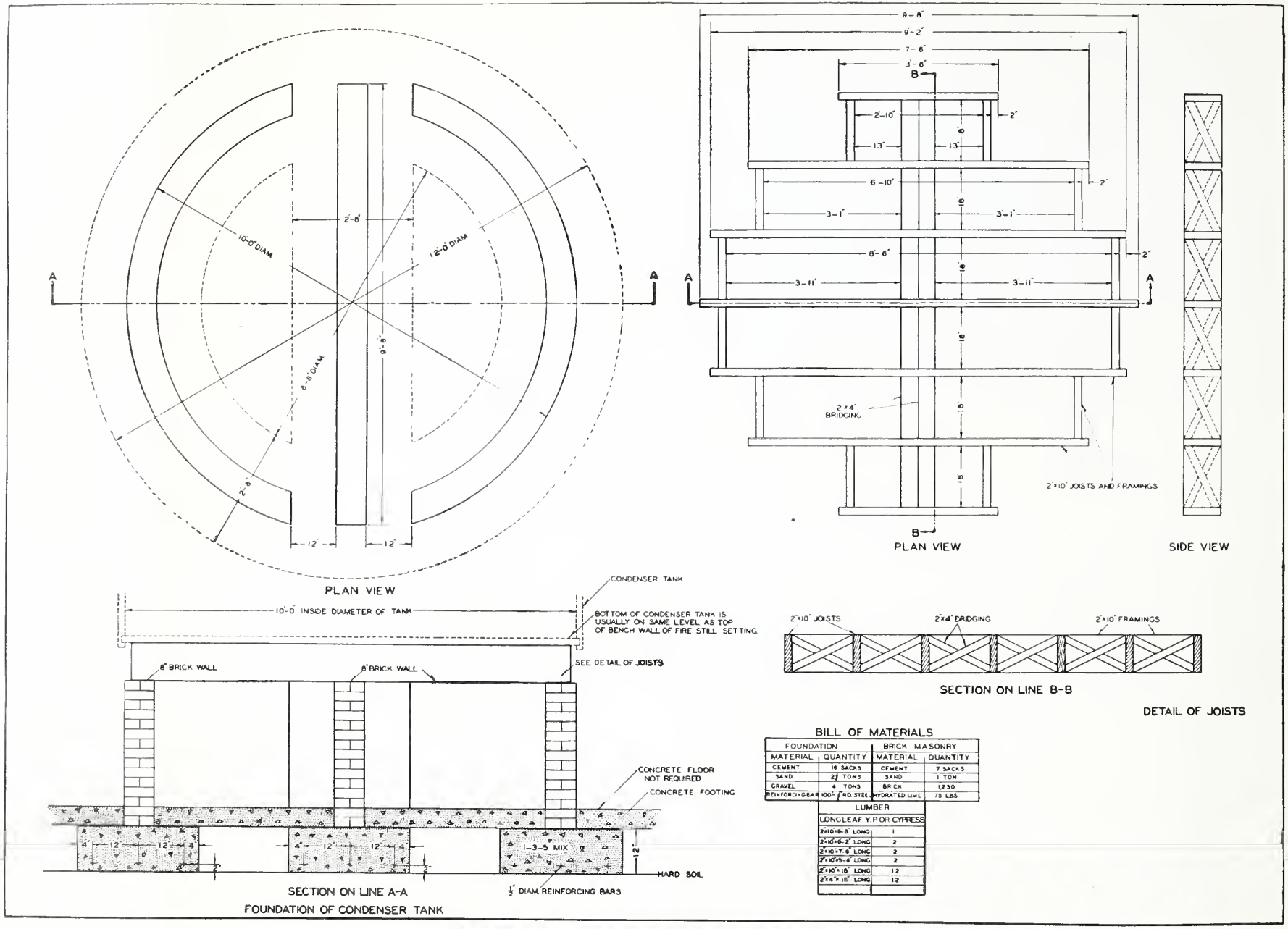


Figure 29.—*Foundation for condenser tank.*

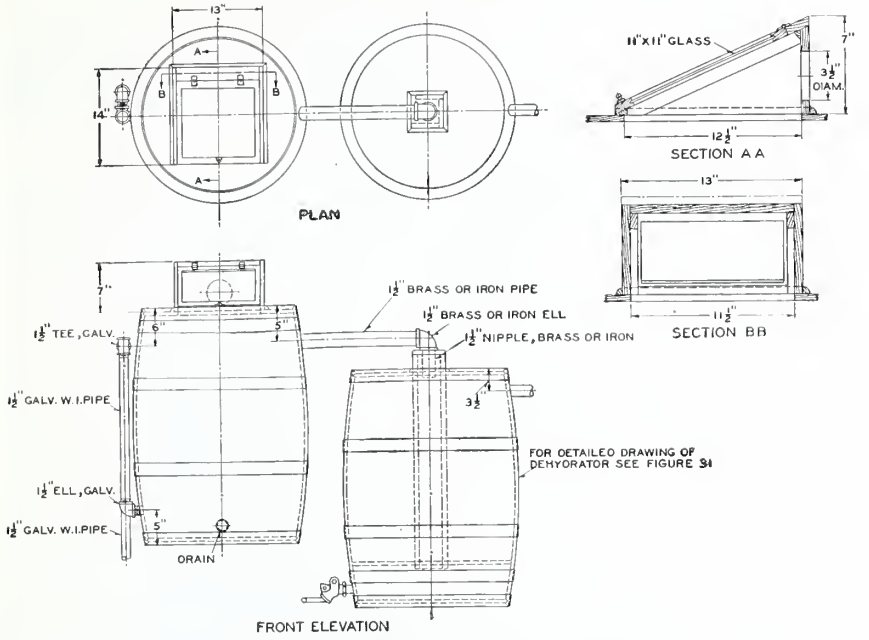


Figure 30.—*Turpentine separator with dehydrator.*

and is the cause of most of the leaks that develop after the wooden barrel has left the still. In metal drums, cans, or tank cars, the separated water will shortly cause rusting, resulting in the discoloration of the turpentine. It is therefore desirable that all water, both free and dissolved, be removed from the turpentine.

Water is soluble in turpentine to a varying degree, depending on the temperature of the turpentine. Consequently, upon cooling, a clear turpentine may become cloudy because of the separation of dissolved water.

The Naval Stores Station has developed a practical low-cost device for removing traces of free water and to some extent the dissolved water. This turpentine dehydrator is shown in figure 31. To prevent the barrel from leaking, the interior should be painted with a mixture of equal parts by weight of red lead and dry orange shellac dissolved in alcohol.

# Strainers

Straining ultimately determines whether the rosin to be marketed will be clean, dirty, or unmerchantable. Rosin is made less brilliant and is lowered in grade by fine particles of dirt. To produce clear, well-strained rosin it is necessary to use a well-constructed set of strainers, the proper size and type of strainer wires, and good batting.

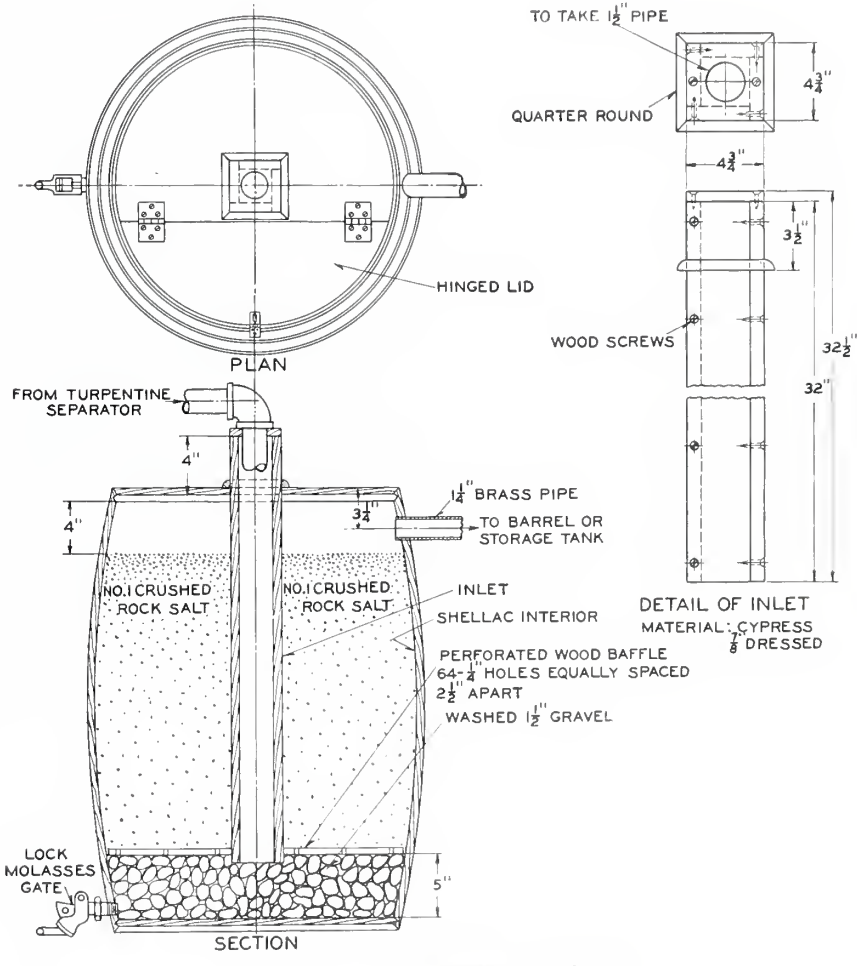


Figure 31.—*Turpentine dehydrator.*

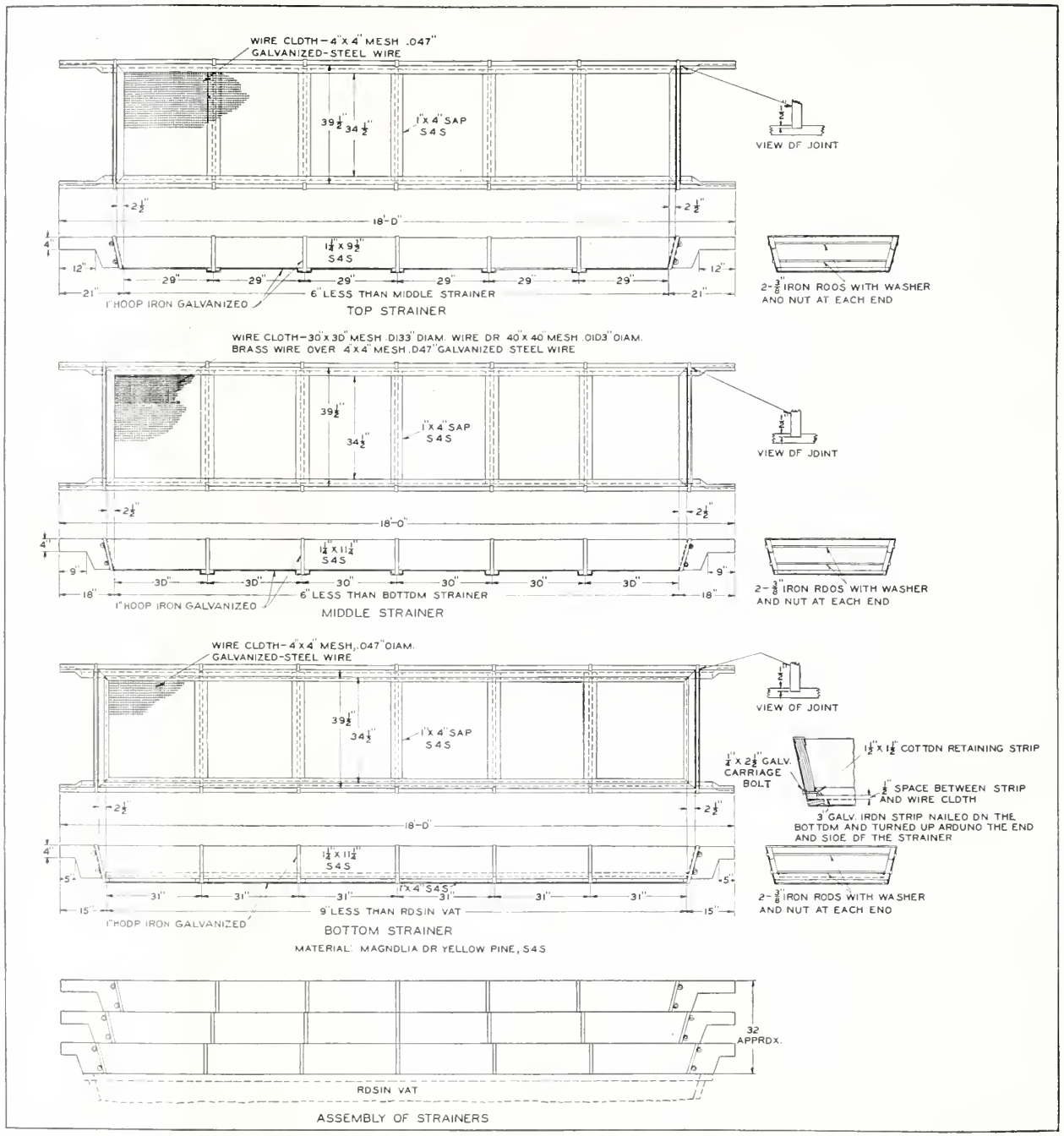


Figure 32.—*Rosin strainers.*

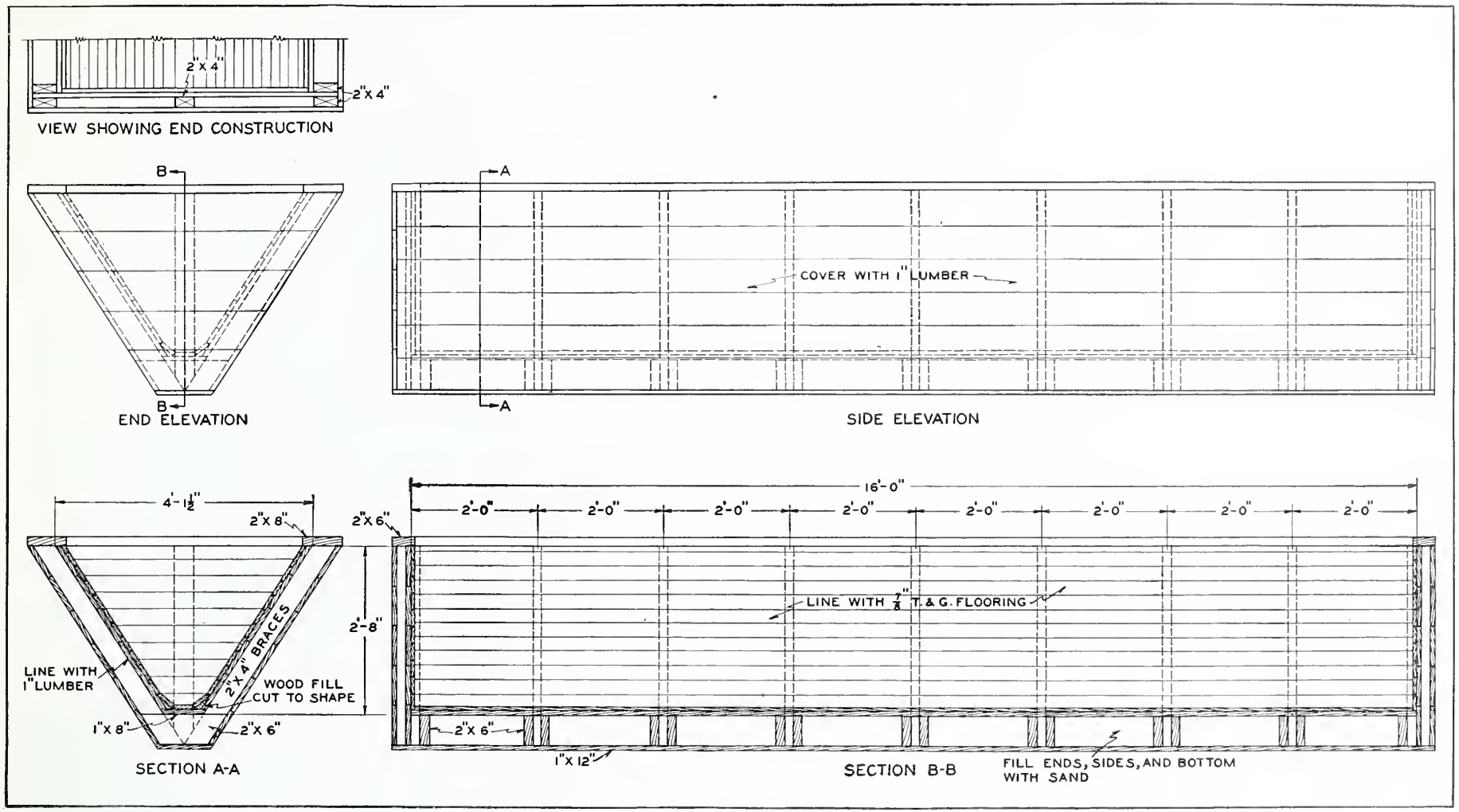


**Figure 33.**—*Rosin vat.*

Strainers built according to the plan shown in figure 32 have proved very satisfactory. The extra labor and expense required for their construction are a good investment. These strainers fit the vat shown in figure 33.

## Vats

A rosin vat should be well built, whether it is to be emptied by dipping or by gravity from a tail gate. The vat may be built of wood or metal. It should be located in the building so that water cannot get into the hot rosin, and with the top of the vat at least 4 inches above the floor to keep out dust and dirt. It must, of course, be leakproof and of sturdy construction.

A wooden vat of the type commonly used by the industry is shown in figure 33. This vat is designed to hold the discharge from a 25-barrel fire still. Metal vats can be purchased from manufacturers of sheet-metal equipment for the naval stores industry.

## Storage of Turpentine

Facilities for the storage of turpentine should provide maximum protection against fire, theft, and deterioration. If storage tanks are used, a foundation that will not settle is necessary. Experience at the Naval Stores Station indicates that foundations of either steel or wood are satisfactory. The tanks should be separated from each other by at least 25 feet and should be at least 100 feet from the nearest building.

If barrels or drums are used for storage of turpentine at the still they should be placed in rows on skid poles under the roof, with sufficient space between the rows to permit discovery of leaks.

Experiments conducted by the Naval Stores Research Division have shown that dehydrated turpentine protected from the air and kept in cleaned, filled containers may be stored for several years without discoloration. These conditions are difficult to obtain in commercial practice, as the tanks are not always filled. A breather pipe to take care of expansion and contraction of the turpentine and air in the tank must be provided. As a result, it is possible for moist air to enter the tank, condense, and corrode the metal, discoloring the turpentine.

As a protection against corrosion, the inside of the tank must be kept well covered with paint. The following paint formula has been found very satisfactory:

| | | |
|---|---|---|
| Wood or denatured alcohol | gallons | 5 |
| Orange shellac (pure) | pounds | 24 |
| Dry red lead | do | 24 |
| Venice turpentine | ounces | 28 |

This formula makes about 8 gallons of paint, which is enough to give the interior of an 8,000-gallon tank two coats. Before applying the paint, remove all rust with a wire brush, especially at all joints, corners, and rivet heads. Allow the first coat to dry thoroughly before applying the second.

Safety precautions should be taken by a man working inside turpentine tanks or tank cars. A suitable gas mask should be worn as a protection against the alcohol fumes of the paint and the turpentine fumes in the tank. The simplest and probably the safest type of mask for this purpose is one equipped with a rubber hose connected to a small blower or fan through which fresh air is constantly pumped to the workman.

In withdrawing the turpentine from the storage tank to fill barrels or tank cars it should again be run through dehydrators of the same type as those used at the still (fig. 31).

## Storage of Rosin

The rosin yard should be well drained and at least 100 feet from the nearest building and turpentine-storage tank. Barrels of rosin should be set in double rows with sufficient space between the rows to permit ease of handling. If well-constructed barrels made from seasoned staves are used, it is possible to store the rosin for at least 2 years on skid poles treated against decay. Storage on skid poles is not recommended, however, unless the barrels are exceptionally well made. Painting the outside of the bottom of the barrel with some form of creosote paint does not appear to give sufficient additional protection to compensate for the additional cost. Results of tests made at the Forest Products Laboratory, Madison, Wis., indicate that air-dried staves and heads soaked in a 5-percent solution of zinc chloride at room temperature for an hour are more durable than untreated sapwood.

## Rosin Trough

Where it is possible to take advantage of a hillside site for the still, permitting the filling of the rosin barrels from a tail gate in the rosin vat, a trough may be set over the barrels. Plans for both a metal and a wooden trough are given in figure 34.

## Temperature Regulator for Tub Water

Procuring an ample supply of condenser water is sometimes a serious problem. Sufficient water to condense and cool the spirits is essential. Use of a temperature regulator (fig. 1) prevents waste of condenser water because it automatically controls the rate of flow of water into the tub. Some type of spray into an open reservoir such as that used at ice plants has been found economical and helpful in cooling the condenser water to be reused.

## Cooper's Winch

The most important tool of the cooper is a winch. An efficient and low-cost winch can be made according to the plan in figure 35. Bar iron 1 by ¾ inch, or a ¾-inch pipe may be used. It can easily be made in any blacksmith shop and will far outlast most of the large wooden wheels commonly used.

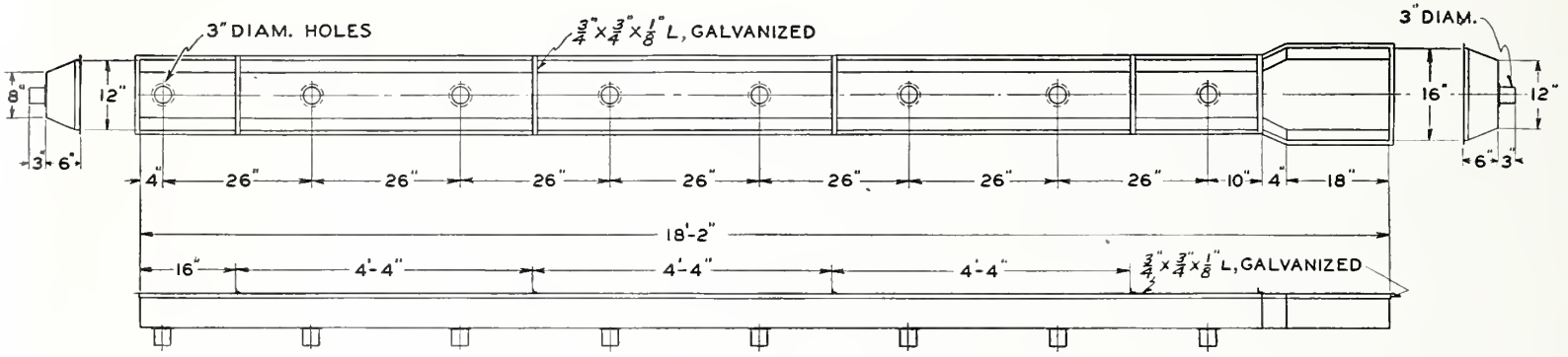


MATERIAL—#24 GA. GALVANIZED SHEET STEEL

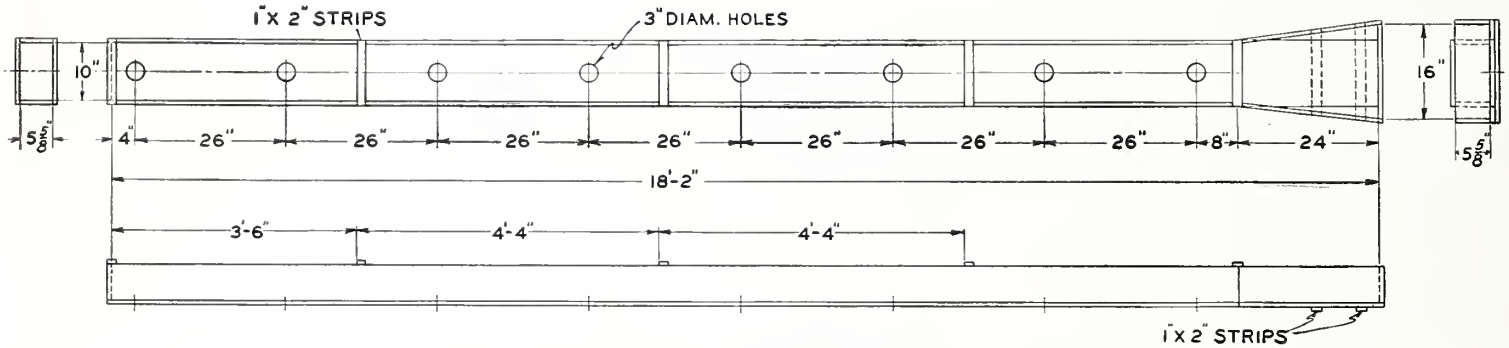


MATERIAL—BOTTOM, 1" X 12" DRESSED PINE
SIDES AND ENDS, 1" X 6" DRESSED PINE

Figure 34.—*Rosin trough.*

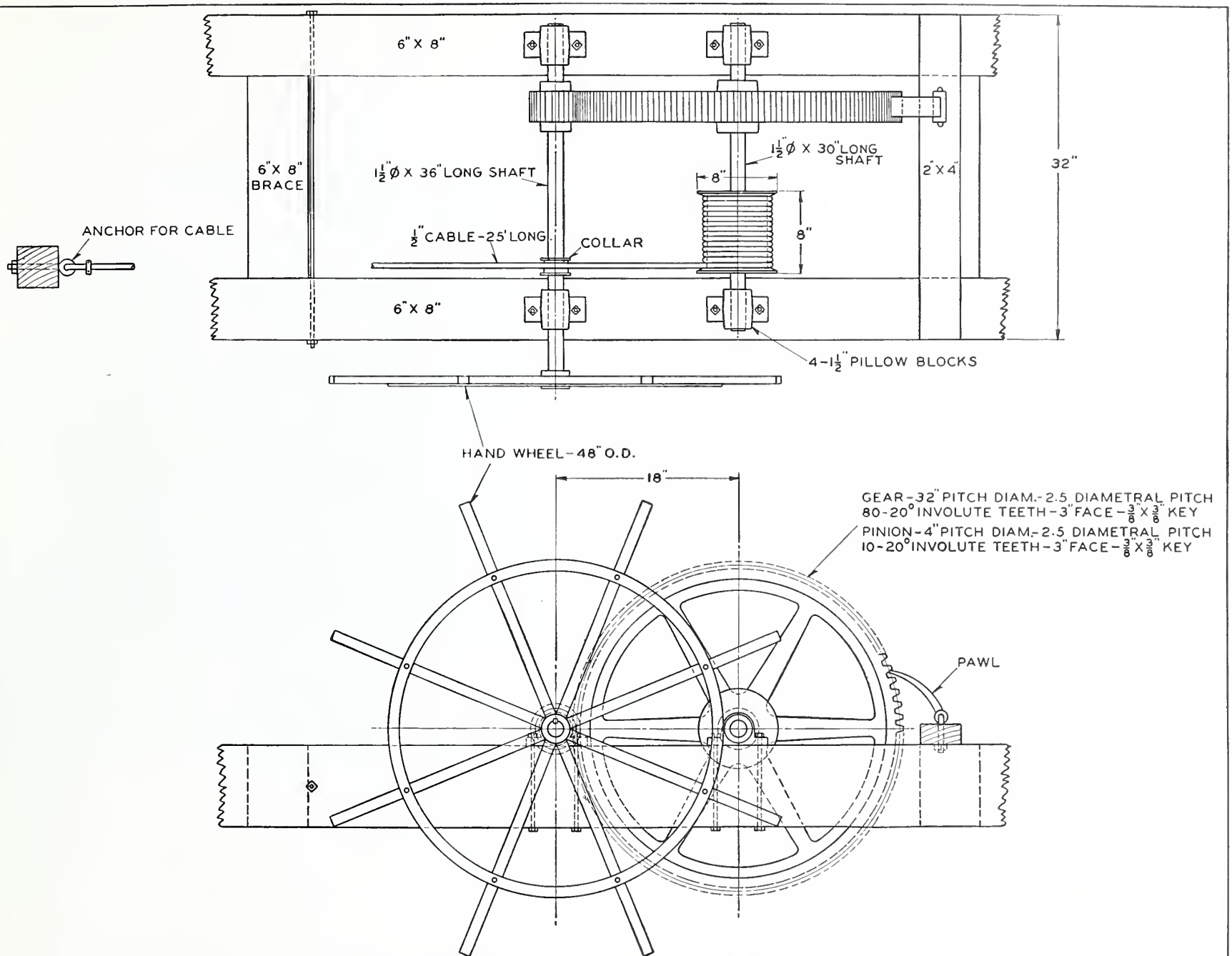


Figure 35.—*Cooper's winch.*

# Organization of the United States Department of Agriculture when this Publication was last Printed

*Secretary of Agriculture:* Claude R. Wickard.
*Under Secretary:* Paul H. Appleby.
*Assistant Secretary:* Grover B. Hill.
*Director of Information:* M. S. Eisenhower.
*Director of Extension Work:* M. L. Wilson.
*Director of Finance:* W. A. Jump.
*Director of Personnel:* Roy F. Hendrickson.
*Director of Research:* James T. Jardine.
*Director of Marketing:* Milo R. Perkins.
*Solicitor:* Mastin G. White.
*Land Use Coordinator:* M. S. Eisenhower.
*Office of Plant and Operations:* Arthur B. Thatcher, *Chief.*
*Office of C. C. C. Activities:* Fred W. Morrell, *Chief.*
*Office of Experiment Stations:* James T. Jardine, *Chief.*
*Office of Foreign Agricultural Relations:* Leslie A. Wheeler, *Director.*
*Agricultural Adjustment Administration:* R. M. Evans, *Administrator.*
*Bureau of Agricultural Chemistry and Engineering:* Henry G. Knight, *Chief.*
*Bureau of Agricultural Economics:* H. R. Tolley, *Chief.*
*Agricultural Marketing Service:* C. W. Kitchen, *Chief.*
*Bureau of Animal Industry:* John R. Mohler, *Chief.*
*Commodity Credit Corporation:* Carl B. Robbins, *President.*
*Commodity Exchange Administration:* Joseph M. Mehl, *Chief.*
*Bureau of Dairy Industry:* O. E. Reed, *Chief.*
*Bureau of Entomology and Plant Quarantine:* Lee A. Strong, *Chief.*
*Farm Credit Administration:* A. G. Black, *Governor.*
*Farm Security Administration:* C. B. Baldwin, *Administrator.*
*Federal Crop Insurance Corporation:* LeRoy K. Smith, *Manager.*
*Forest Service:* Earle H. Clapp, *Acting Chief.*
*Bureau of Home Economics:* Louise Stanley, *Chief.*
*Library:* Claribel R. Barnett, *Librarian.*
*Bureau of Plant Industry:* E. C. Auchter, *Chief.*
*Rural Electrification Administration:* Harry Slattery, *Administrator.*
*Soil Conservation Service:* H. H. Bennett, *Chief.*
*Surplus Marketing Administration:* Milo R. Perkins, *Administrator.*

This publication is a contribution from

*Bureau of Agricultural Chemistry and Engineering:* Henry G. Knight, *Chief.*
*Naval Stores Research Division:* C. F. Speh, *Principal Chemist, in Charge.*